NO. 27 NOTES FROM THE SHOP $2.50

Woodsmith®

PATIO FURNITURE

COMPLETE PLANS FOR:

- PICNIC TABLE
- PATIO CHAIRS
- OUTDOOR BENCH

PLUS . . . A SHOP TEST ON CARBIDE-TIP SAW BLADES

Woodsmith

Number 27 May/June, 1983

Editor
Donald B. Peschke

Design Director
Ted Kralicek

Assistant Editors
Steve Krohmer
Michael P. Scott

Graphic Designers
David Kreyling
Marcia Simmons

Subscription Manager
Sandy J. Baum

Subscription Assistants
Christel Miner
Vicky Robinson
Jackie Stroud
Shirley Feltman
Pam Dickey

Computer Operations
Ken Miner

Circulation Manager
Jeff Farris

Administrative Assistant
Cheryl Scott

ISSN: 0164-4114

WOODSMITH is published bimonthly (January, March, May, July, September, November) by Woodsmith Publishing Company, 1912 Grand Ave., Des Moines, Iowa 50309.
WOODSMITH is a registered trademark of the Woodsmith Publishing Company.
©**Copyright 1983** by Woodsmith Publishing Company. All Rights Reserved.
Subscriptions: One year (6 issues) $10, Two years (12 issues) $18. Single copy price, $2.50 (Canada and Foreign: add $2 per year.)
Change Of Address: Please be sure to include both your old and new address for change of address. Mail to: Woodsmith, 1912 Grand Ave., Des Moines, Iowa 50309.
Second class postage paid at Des Moines, Iowa.
Postmaster: Send change of address notice, Form 3579, to Woodsmith Publishing Co., 1912 Grand Ave., Des Moines, Iowa 50309.

BACK ISSUES

A list of the contents of all back issues appears on the wrapper of this issue. If the wrapper is missing, you can send for a booklet describing the contents and prices of all back issues.

SAMPLE COPIES

If you have a friend who would like to see a copy of **Woodsmith**, just send the name and address, and we'll send a sample (at no cost).

Sawdust

ABOUT THIS ISSUE. I have a navy-blue sweater with a hole in one sleeve. It's thread-bare, and sagging from old age. And I've been told it's time to get rid of "that old thing" and buy a new one.

But I like my old sweater. I always feel warm in it — even though I know a new sweater would really be warmer.

So what's the point of all this talk about old sweaters? I thought this was a woodworking magazine.

Well, it's just that I have almost the same feelings about my saw blade. For the past couple of years I've been using a Freud 50-tooth carbide-tipped combination blade. That blade has cut a lot of wood and even though it's beginning to wear down a bit, I feel comfortable with it and it always gets the job done.

I wouldn't think of getting a new one. That is, until I made the mistake of using one of Freud's new LU85M "Anti-grip" blades. Just one cut, that's all it took to completely alter my way of looking at saw blades and what I should expect of them.

But before I get too excited about this blade, let me back up a minute and explain how all of this started. Steve Krohmer (our assistant editor) drew the assignment of writing a two-page article about saw blades.

We agreed that we should buy several types of blades and test them out to see if there really was any difference between one blade and another. Without going overboard on this project, we settled on two brands: Sears and Freud. Then we added the "Mr. Sawdust" blade, because I keep seeing full-page ads for it in *Fine Woodworking* and I wanted to know just how good it was.

In the middle of all this, Ted Kralicek (our Design Director) decided we should get a new table saw. Things were getting a little crowded in the shop — almost to the point that we had to schedule time on the one table saw we had.

Our new saw and the collection of saw blades arrived about the same time. It was then I realized that we were really buying two separate pieces of equipment. The table saw by itself is just a way to guide boards through the blade. But it's the saw blade that's really doing all the work.

I left the shop to sign the checks for all this new equipment. Meanwhile, Steve started testing the saw blades. A couple of weeks later, he emerged from the shop and announced that the two-page article on saw blades was now going to be six pages. I agreed — if only to get him out of the shop so I could get some time in on the new saw.

I thought I'd test out the new table saw by cutting through a piece of scrap oak. That's when it happened. I didn't realize Steve had left the Freud "Anti-grip" blade on the saw. As I trimmed off the end of the oak scrap, I noticed something was different.

The cut seemed smooth, almost effortless. I looked at the freshly cut end, and to my surprise, it wasn't smooth . . . it was perfect. The end grain felt like glass. No torn fibers. No tooth marks. Just a smooth, almost burnished surface you couldn't help but touch . . . and be amazed.

I took the blade off the saw to see what it looked like. It looks awesome. The teeth shine like something straight out of a toothpaste commercial. The blade itself is coated with black Teflon. (You get the feeling Darth Vader would use it to cut down his opponents.)

Okay, okay. All of this is beginning to sound like a big public relations effort for Freud saw blades.

I will admit that I'm very impressed with this blade. But in all fairness, I'm sure there are other saw blades that will produce the same quality of cut. (The Mr. Sawdust blade is one of them.)

But the point is this: using a good saw blade does make a difference. If you expect perfection, there are blades that will produce it. Then it's just a matter of how much money it's worth.

I agree with Steve's conclusions that one of the best choice for the money is the Freud 50-tooth combination blade (my old favorite). The new Anti-grip blade is a fantastic blade, but it's designed chiefly for cut-off work.

I also agree that the Sears blades will cut wood, but they simply aren't up to the quality of the Freud products.

As for the Mr. Sawdust blade, I'm still not quite convinced that "the only blade you'll ever need" is worth $160.

NEW FACES. We've added one more new face to the group at *Woodsmith*. Jeff Farris has joined us to coordinate the circulation efforts — the business side of this business. Jeff is from Ava (population 2,504), Missouri, where he operated his own hardwood lumber company.

As he comes on board here, our circulation stands at about 130,000, and Jeff will be responsible for keeping all of those numbers under control. But he's off to a good start. He's already assured me that circulation will increase by one new subscriber. Jeff and Marilyn are expecting their first child August 4th.

NEXT MAILING. The next issue of *Woodsmith* (Number 28) should be in the mail during the week of July 25th.

Tips & Techniques

STICKY STAVES

When it came time to "glue up" the staves used for the turned canisters (*Woodsmith* No. 25), I came up with an easy way to keep everything under control. I just used tape (masking, fiberglass, or whatever) to secure all the individual pieces until they're glued together.

The first step is to lay out all the staves edge to edge with the outside face upward.

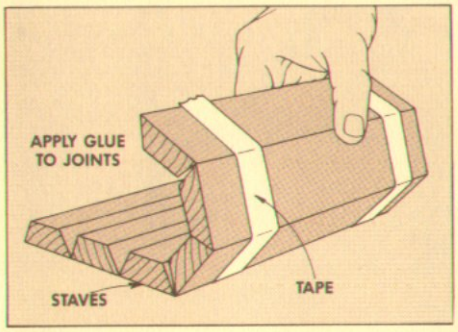

Then I applied two or three rows of tape to the outside face to hold the individual staves together. Finally, the whole assembly is turned over and rolled into a cylinder to check the fit between the staves.

If everything fits okay, the next step is to flatten the assembly out and brush glue on the edges of each stave. Then the entire assembly is rolled up, and clamped with web clamps.

If the fit between the staves needs adjusting, I don't apply glue to two of the joints (opposite each other). This produces two half cylinders after the assembly has been clamped. When everything is dry, I trim the two halves until they mate perfectly. Then finally, the two half cylinders are glued together.

Percy F. Hansen
Walhalla, North Dakota

ORGANIZED DOVETAILS

Recently I constructed a few drawers (14 to be exact) using a dovetail fixture to rout half blind dovetails on all four corners. This involved a total of 56 individual joints, and about 10 million possible combinations.

About the time I was half done, the problem started. All of a sudden I realized that I have become confused about where to position the proper pieces for each joint. (Repetition doesn't sharpen my mind, it dulls it.)

So to eliminate the chance of mounting the pieces into the dovetail jig in the wrong position, I came up with a simple labeling system for both the drawer sides, and the jig.

The first step is to label the individual drawer sides using a simple method that involves marking each drawer side with a letter. The key to this marking system is to mark the letter near the bottom edge on the *inside* face.

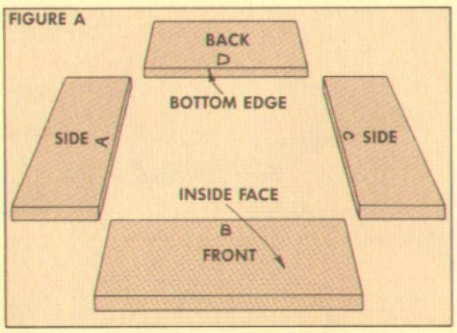

Next, I made two labels that are attached to the dovetail jig for identifying both the proper sides, and their locations for routing each of the four joints. Each label consists of two separate two-letter combinations. Each set of letters is positioned with one letter over the other, representing the two sides needed to form each corner joint. The top letter represents the piece placed in the top of the jig, and the bottom letter represents the piece placed in the front of the jig.

Example: The dovetail formed between sides B and A is cut using the left side of the jig (two of the joints are cut using the left side of the jig, and the remaining two joints use the right side of the jig). The label shows side B over side A, so piece B is inserted in the top of the jig, and piece A

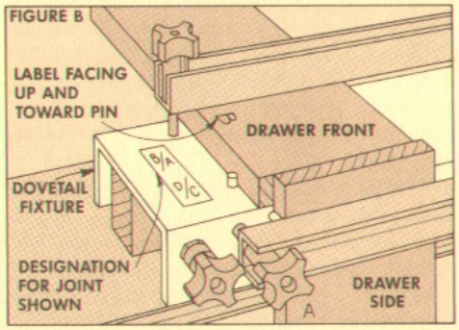

is inserted in the front of the jig. Note: Always keep the labeled face of the drawer sides facing out, away from the jig, and the labeled edge against the guide pins in the jig.

Using this system, I can tell at a glance which two sides are joined together, and where to locate each individual piece. Even after 56 joints.

Sue Kortum
Custer, South Dakota

MEASURED CUT OFFS

I've been using a cut off jig you showed in *Woodsmith* No. 25 for some time now. There is one change I've made that might interest your readers — I added a measuring tape.

To incorporate the measuring tape into the cut off jig, I simply redesigned the fence into an "L" shape. This allows the ½" wide tape to be attached on the shoulder of

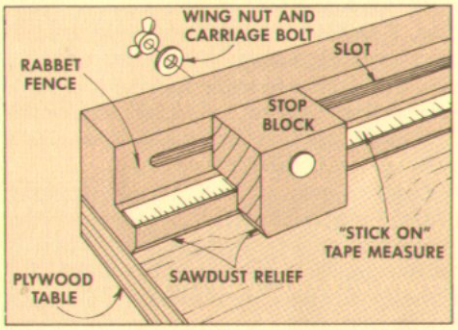

the fence. Then finally, adjustable stop blocks are cut to fit the new fence.

If the measuring tape is attached to the fence of the cut off jig accurately, you can save a lot of time normally used in measuring and marking.

L. A. Snyder
Wyoming, Michigan

Editor's Note: *The only mail order source we've been able to locate for the self sticking counter tapes is Garrett Wade, 161 Avenue of the Americas, New York, New York, 10013. Stock # 30N01.01, $3.90 each.*

These tapes are 6 feet long, ½" wide, and calibrated in 1/16" increments (the first 6" are calibrated in 1/32" increments). They can be easily cut to match the length of the cut-off jig fence (they're made with .008" thick steel). The rule is attached by removing the paper back and simply pressing the tape in position.

One other note: When the tape is set up for a particular blade, it may not be accurate when used with another blade.

SEND IN YOUR IDEAS

If you'd like to share a woodworking tip with other readers of *Woodsmith*, send your idea to: *Woodsmith*, Tips & Techniques, 1912 Grand Ave., Des Moines, Iowa 50309.

We pay a minimum of $10 for tips, and $15 or more for special techniques (that are accepted for publication). Please give a complete explanation of your idea. If a sketch is needed, send it along; we'll draw a new one.

Picnic Table

LIGHT-WEIGHT, STURDY & STORES FLAT

When I set out to build a picnic table, I had two things in mind. First, I had visions of barbecued steaks, corn on the cob, potato salad, and cold watermelon — all nicely laid out on a picnic table in my back yard.

But my second thought was, "What am I going to do with the table when the gloomy weather of winter rolls around and I want to store it away?"

To solve this winter-time storage problem, I needed a fairly light-weight table that could be moved without the use of a tow truck. Also to make moving it around and storing it easier, I wanted to make the legs of the table collapsible so it wouldn't take up much space.

Before I even sat down at the drawing board, I realized that this table is one of the few projects I've designed for when it *wasn't* going to be used. The method I came up with to accomplish this goal was to use a hinged-leg arrangement that's not only easy to set up, but it's also quick and easy to tear down.

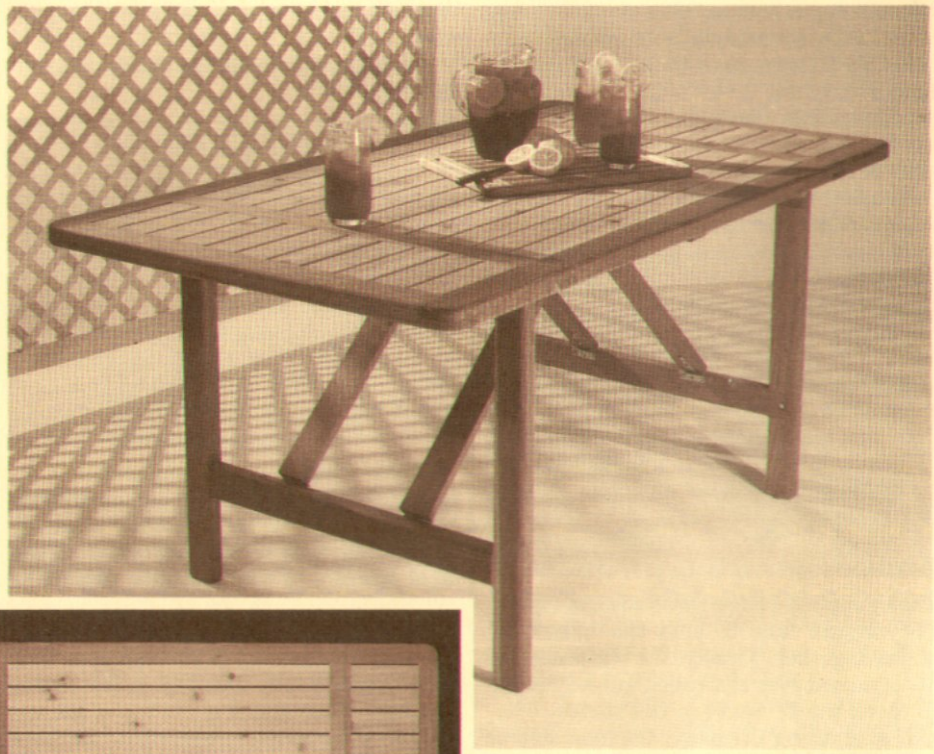

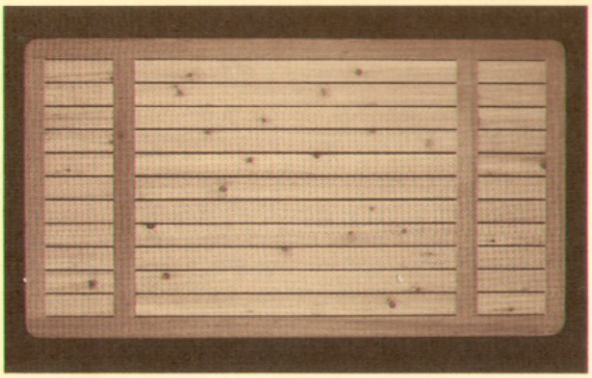

The next problem was to design the table top so the same style could be used on a set of chairs (page 8) and a bench (page 12) — creating a coordinated outdoor furniture set. To coordinate these three components, I used a simple construction technique that involves making frames out of 1½"-thick redwood and then inserting ¾"-thick cedar slats. (These thinner slats also help to reduce the overall weight of the table top).

THE TABLE TOP

The table top is constructed following the same basic theme of the entire outdoor furniture set: a redwood frame with cedar slats. Only in the case of the table top, the frame is modified slightly to accommodate two extra divider rails, see Fig. 1.

These extra rails serve two purposes. First, they shorten the span of the cedar slats (thus providing additional support for the slats). And second, they provide a place for attaching the legs on the underside of the table.

CUT TO SIZE. All of the pieces for the table top are ripped to a standard width of 2½". I started with the six pieces for the frame, ripping them out of 2x6 redwood, see Cutting Diagram.

SHOP NOTE: Since 2x6s usually have rounded edges, I ripped these pieces to get two clean (square) edges. It should be easy, I thought, to get two 2½"-wide pieces out of a 2x6 (which is actually 5½" wide). But it didn't work that way on the material I was using because some of the boards were narrower than they were supposed to be.

What I wound up doing was ripping the 2x6s down the center first. Then I set the fence for 2½" and ripped off as much of the outside (rounded) edge as I could.

Finally, I cut the two long rails (A) to a length of 64", and the end rails (B) and the divider rails (C) to a length of 35½".

HALF LAPS AND GROOVES

After all six pieces are cut to size, they're joined with half laps to form the frame. I cut the half laps on both ends of the divider rails (C) and the end rails (B) first. (All four pieces are cut with the same setting on the saw to make sure the shoulder-to-shoulder distance between the half laps is exactly the same on these four pieces.)

Next, I cut the joints on the two long rails (A) — a half lap at both ends, and cross laps 8" from each end, see Fig. 2.

GROOVES. After the joints were cut, I cut grooves on the edges of the two end rails (B) and the two divider (C) rails to house the slats. Here, I wanted to make sure the face of the slats would be flush with the face of the frame members.

To do this, hold the face side of one of the slats on the edge of one of the rails, and mark the position of the *underside* of the slat on the edge of the rail. Then set up the saw to cut a ⅜" x ⅜" groove so the bottom edge of the groove is on the line.

As shown in Figure 2, the two end rails (B) have grooves on the inside edge only. The two divider rails (C) have grooves on both edges.

LAG SCREWS. To strengthen each of the half laps I added lag screws at each joint. But before drilling for the lag screws, first I dry-clamped all six members of the frame (clamping the long rails against the shoulders of the half laps on the end rails and divider rails). Then just to be sure, I double-checked the frame for square.

Finally, I marked the center of each joint and drilled ¾" counterbores ⅜" deep, followed by ⅛" pilot holes. (I found the easiest way to drill all these holes was to use a drill mounted in a Portalign attachment.)

THE SLATS

While the frame is dry-clamped together, measure the distance between the grooves to determine the length to cut the slats. Then all of the slats are cut 2½" wide, and to length (to fit between the grooves).

After cutting the slats to size, I cut rabbets on each end to leave a ⅜" x ⅜" tongue to fit the grooves, see Fig. 3.

And finally, to reduce the chance of splintering, I also chamfered both top edges of each slat.

ASSEMBLY

Now the table top is ready to be assembled. Slide the slats into the grooves and apply adhesive to all the half laps. (I used resorcinol glue. It's waterproof and suitable for outdoor projects.) Then drive the lag screws home.

When the glue is dry, cut a 1¾" radius on the four corners of this frame with a sabre saw, and round over all edges with a ⅜" corner-round bit, see Fig. 4.

ALIGN SLATS. Position the slats evenly across the width of the table, and drive 3-penny finish nails through the center of each slat (from the bottom side of the table).

BRACKET FOR LEGS

Finally, a support bracket is mounted to the underside of the table, see Fig. 5. This bracket supports the slats at the center of the table, and is also used to mount the hinged braces for the legs.

Cut the bracket (D) to length so it overlaps the outside rails 1½" on both ends, see Fig. 6. Then cut a half lap on each end so the shoulders of the half lap fit tight against the inside edges of the long rails.

After it's cut to length, drill pilot holes and apply glue to the half lap (but not on any part that touches the slats), and screw it in place.

SECURE SLATS. Finally, I counterbored pilot holes in the bracket, so each hole was centered on a slat (see Fig. 5) and secured the slats to the bracket with #8 - 1¾" woodscrews.

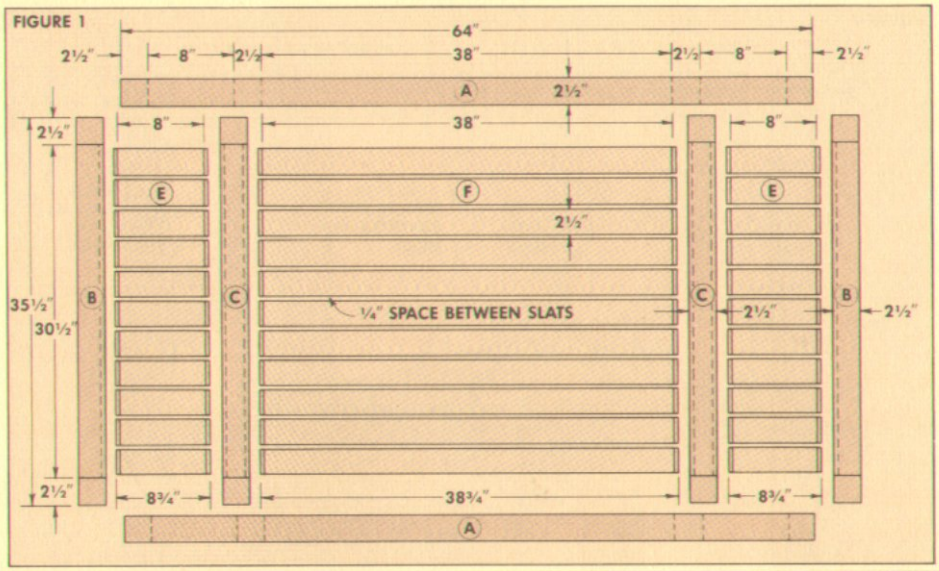

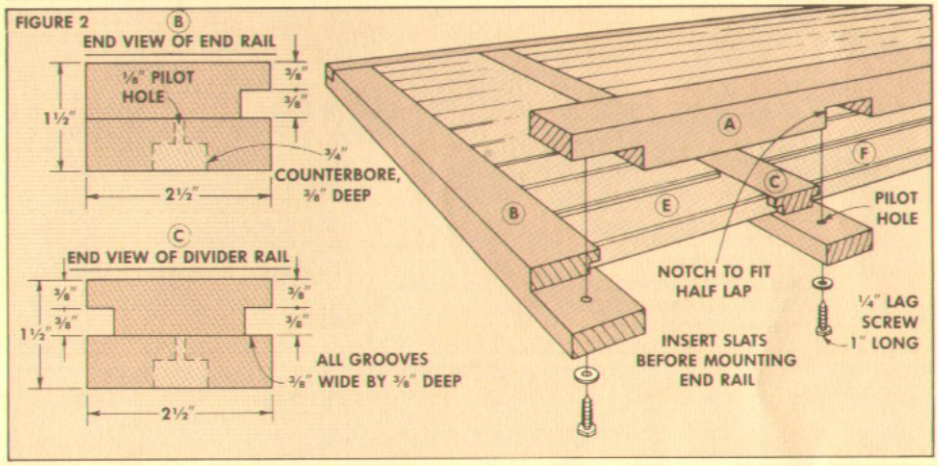

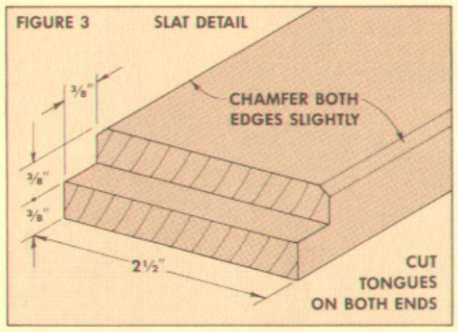

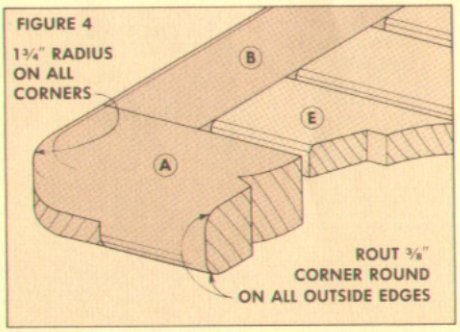

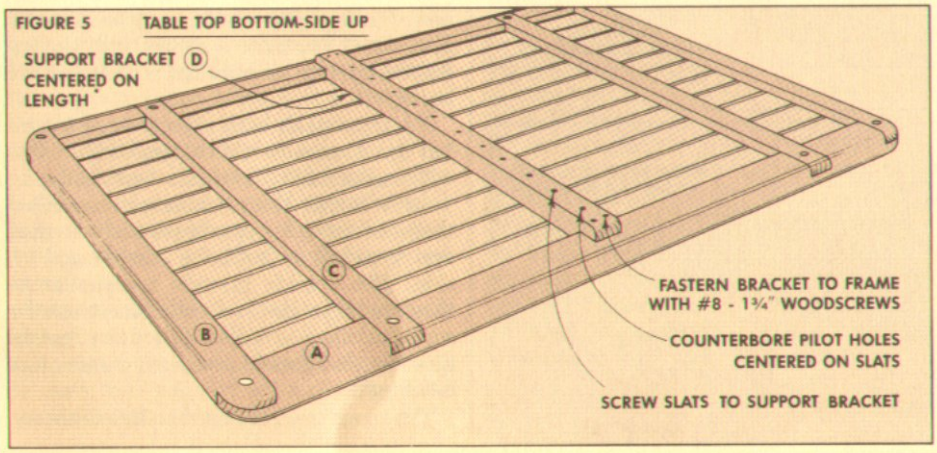

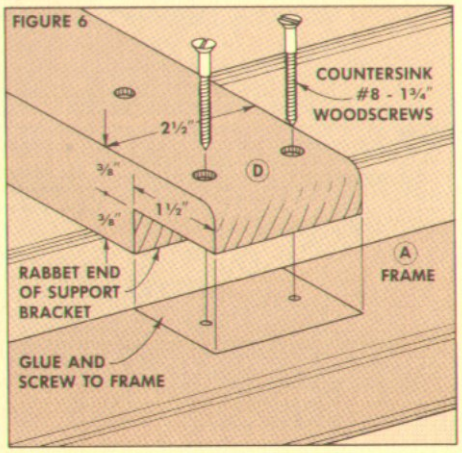

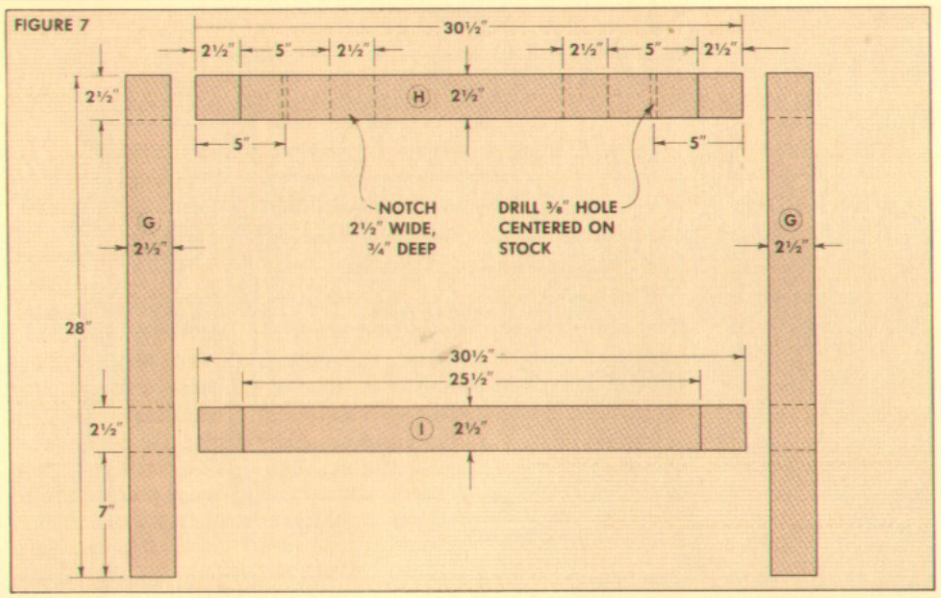

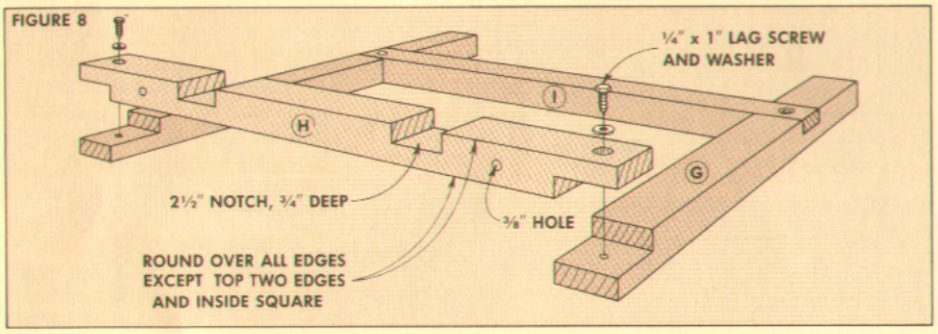

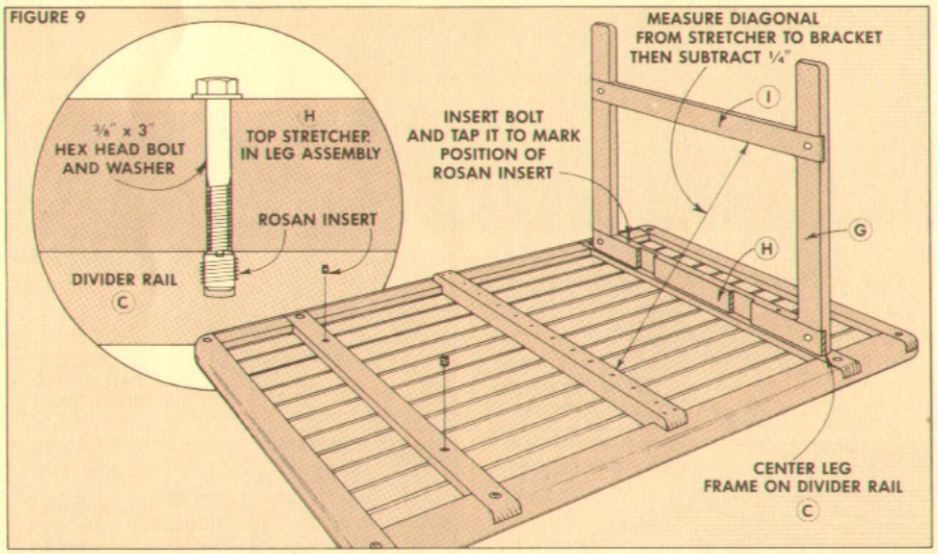

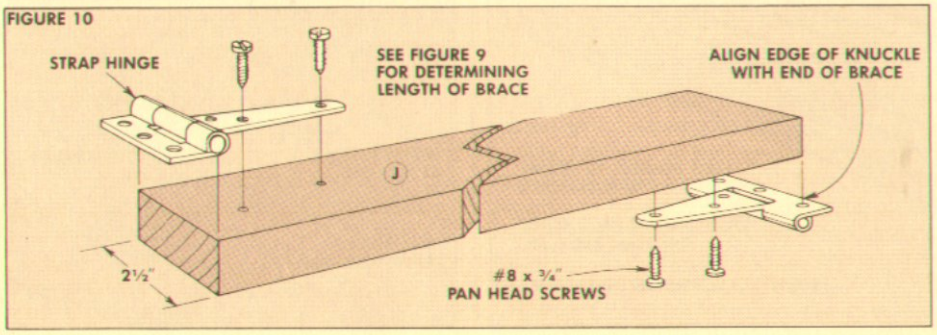

THE LEG ASSEMBLIES

After the table top is built, the only thing left to do is to add the legs. Initially, I designed this table with a trestle leg system. But this style doesn't allow the legs to collapse for easy storage.

After a little more time at the drawing board, I came up with a hinged leg system that's sturdy, yet can be disassembled for storage. And one of the nicest things about this system is that it only requires building two simple frames . . . using half laps, naturally.

LEG ASSEMBLIES. Both leg frames consist of two legs (G), and two stretchers (H and I). The first step is to rip all of the pieces for the frame to 2½" wide. Then I cut the legs to a length of 28", and the two stretchers 30½" long.

After all the pieces for the leg assemblies are cut to size, the next step is to cut half laps on both ends of the legs, and on both ends of the stretchers, see Fig. 7.

At this point, I cut two additional notches in the top stretchers (H) on both leg assemblies. These notches house the braces (J) so they lie flat against the table top (when the table is broken down for storage), refer to Fig. 11. These notches are 2½" wide, ¾" deep and are cut 7½" from each end of the stretcher.

The last step before assembly is to drill two ⅜" holes for the bolts used to attach the legs to the table top. These holes are 5" from each end of the top stretcher, see Fig. 7.

ASSEMBLY. Now the leg frames are ready for assembly. Dry-clamp the four pieces for each frame, and check the fit of the joints and the square of the frame. Then mark the center of each joint and drill ¾" counterbores, ⅜" deep. Follow these counterbores with the ⅛" pilot holes for the leg screws. Finally, apply glue to each joint and lag screw the leg frames together.

MOUNT THE LEG FRAMES

One of the tricks to this leg system is the way it folds down for storage. To be effective, the legs have to be easy to remove. Yet, when the table is assembled, the leg frames have to be mounted so that they're sturdy.

To accomplish both objectives, I mounted the frames to the bottom of the table with rosan inserts and hex head bolts.

SHOP NOTE: Rosan inserts (also called threaded inserts) are brass sleeves that are threaded on both the outside and inside. The outside threads are similar to those on a screw — so the insert can be screwed into a hole. Then the inside threads are sized to accept a common hex head bolt.

The rosan inserts I used on this table are

threaded on the inside to accept a ⅜" hex head bolt. And the hole needed to screw them in place should be ½" in diameter.

DRILL HOLES. To mount the rosan inserts, the first step is to mark the position of two holes on the divider rail (C). These two holes must line up with the two holes in the top stretcher of the leg frame.

To mark their position, I put hex head bolts in the holes of the stretcher and centered the stretcher on the divider rail. When it's centered, I just gave the bolts a sharp tap to mark where the holes should be drilled.

Drill ½" holes at these points, and screw the ⅜" rosan inserts in place. And finally, mount the legs with ⅜" x 3" hex head bolts.

SUPPORT BRACES

The leg frames are supported with two braces (J) going from the bottom stretcher of each frame to the center bracket, see Fig. 9. To get the final length of these braces, first mount the legs to the bottom of the table. Then measure from the inside corner of the stretcher (I) to the inside corner of the bracket (D) and subtract ¼" from this measurement to allow room for the hinges.

MOUNT BRACES. To mount the braces, I used strap hinges on both ends of the braces, see Fig. 10. First, I attached the strap end of one hinge to the end of the brace. Then on the other end of the brace, I attached another strap hinge to the opposite face.

Next, I mounted the flap end of one hinge to the center bracket. Here, be sure the knuckle of the hinge is centered on the edge of the bracket, see Detail in Fig. 11. However, when mounting the other hinge to the stretcher, slide the knuckle off-center slightly — so the *edge* of the hinge knuckle is on the edge of the stretcher. (This is to make sure the hinge doesn't bind when the legs are folded down.)

FOLDING THE LEGS

When the braces are mounted, the table is ready to use. Then when you want to disassemble it for storage, loosen the hex head bolts (that hold the leg frames to the rosan insert on the bottom of the table). Then fold the leg frames down, moving the top stretcher toward the center of the table.

If everything is aligned properly, the support braces (J) should fold neatly in the notches in the bottom stretcher of the leg frames. To hold the leg frames in place during storage, I added small hooks and screw-eyes.

FINISHING. Since food is likely to come in contact with the surface of the table, a stain that's non-toxic when it's dry should be used. See page 14 for a review of the possible stains to use.

FIGURE 11

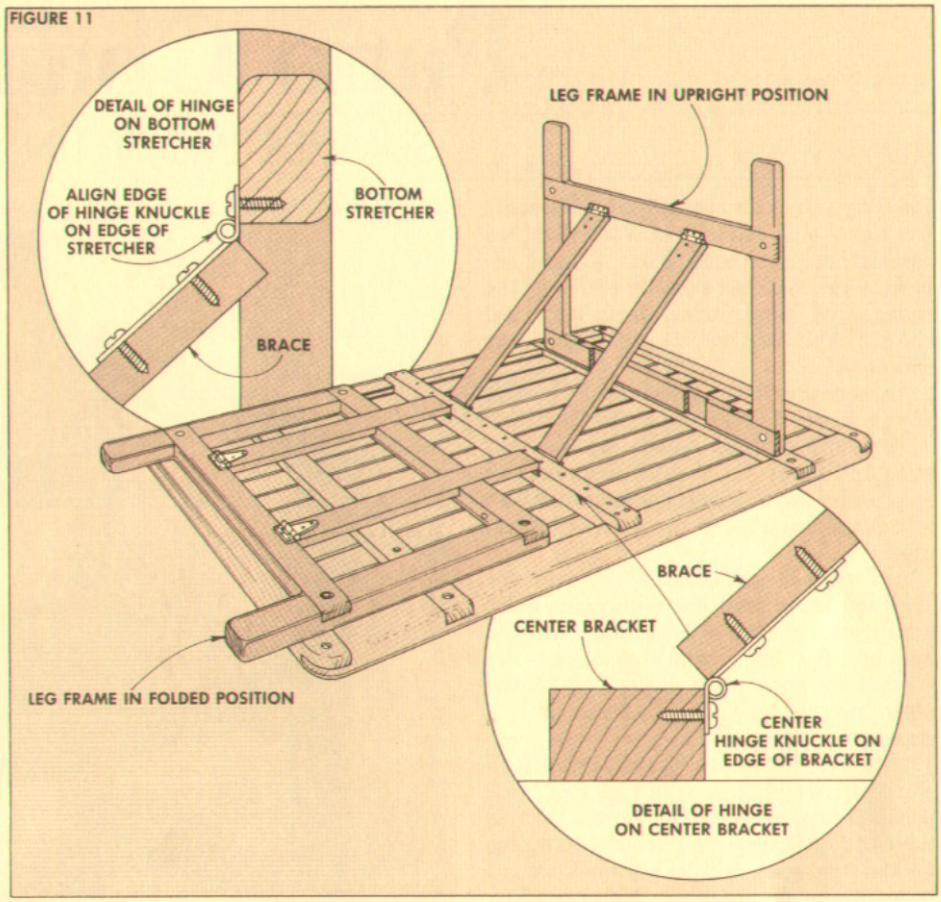

FIGURE 12

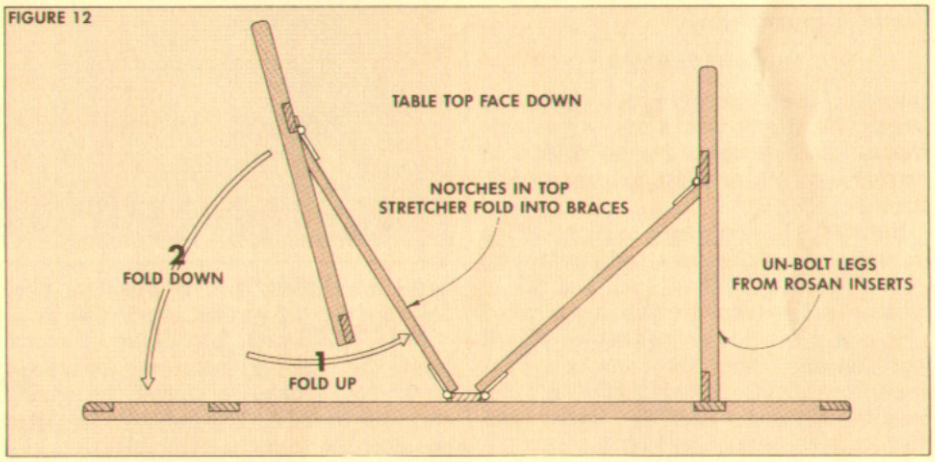

MATERIALS LIST

For the Table Top Frame:		
A	Long Rails (2)	1½ x 2½ - 64
B	End Rails (2)	1½ x 2½ - 35½
C	Divider Rails (2)	1½ x 2½ - 35½
D	Center Bracket (1)	1½ x 2½ - 33½
E	Short Slats (22)	¾ x 2½ - 8¾
F	Long Slats (11)	¾ x 2½ - 38¾
For the Leg Frames:		
G	Legs (4)	1½ x 2½ - 28
H	Top Stretchers (2)	1½ x 2½ - 30½
I	Bottom Stretchers (2)	1½ x 2½ - 30½
J	Braces (4)	¾ x 2½ - 26

CUTTING DIAGRAM

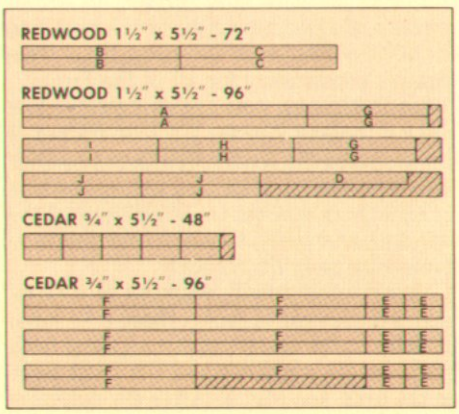

Patio Chairs

SUMMERTIME SITTIN'

Building a chair for outdoor use (especially one that's built entirely of wood) has two essential requirements. First, it must adhere to the mailman's creed: resisting the ravages of "mud, rain, sleet, hail, and snow." And second, it can't have any splinters.

To meet the first requirement, the chair shown here is built with redwood and cedar. Both of these woods are weather resistant. However, they're also prone to splintering. So all edges are rounded over and sanded smooth to prevent any hang-ups.

As for the construction of this chair, it's designed to be built using only one basic woodworking joint — a half lap (with the help of a few lag screws). Also, to make everything go a little easier, *all* of the pieces used to build this chair are cut to a standard width of 2½".

TO START. To start things off, I ripped all of the redwood to a width of 2½". (All pieces are cut out of 2x6 stock, as shown in the Cutting Diagram.) Then the 16 pieces for the side, seat, and back frames are cut to length as shown in the Materials List (Items A through G).

THE SIDE FRAMES

Once all of the pieces were cut to width and length, I started to work on the two side frames. Both of these frames consist of two legs (A), one arm (B), and one middle stretcher (C).

JOINERY. The first step is to cut a half lap on both ends of the arms and stretchers, and on the top end of each leg. Then another half lap (which in this case is called a cross lap), is cut near the bottom of each leg. The only thing that sets this joint apart from all the others is that it's cut 3½" from the bottom of each leg, rather than flush with the ends, see Fig. 1.

SHOP NOTE: Although I started construction with the two side frames, in actual practice it's best to cut all of the half laps for all four frames at the same time. This ensures consistency for all of the joints.

COUNTERBORE FOR LAG SCREWS. After cutting the half laps for the side frames, I dry-clamped the frame members together with pipe clamps (clamping across the legs to hold them against the shoulders of the arm and stretcher). Check all the joints to make sure they fit properly.

Then I used a drill mounted in a Portalign attachment to counterbore a ¾" hole, ⅜" deep in the center of three joints: both joints on the stretcher and the front joint on the arm, see Fig. 1. After the counterbores are drilled, drill ⅛"-diameter pilot holes for the lag screws, see Detail B.

Note: The fourth joint (where the arm meets the back leg) has a hole for a pivot dowel that's used to attach the chair's back, see Detail A. This hole is drilled later on (after the frame is assembled).

GLUE UP. After the three counterbores and pilot holes are drilled, remove the bar clamps and round-over the bottom end of each leg with a ⅜" corner-round bit (on a router table), see Fig. 2.

Now, glue is applied to all four joints of both frames. (I used resorcinol glue for this project. It's waterproof and suitable for outdoor applications.) Then drive 1" lag screws in three of the joints. The fourth joint (for the pivot dowel) is held together with a C-clamp until the glue dries.

ROUND OVER. To soften the edges of the chair, cut a 1¾" radius on the top corners of the frames (where the legs and arms meet). Then round-over all of the edges on the *outside* of the frame, see Fig. 3. (The inside edges, between the arm and the stretcher, remain square-edged.)

PIVOT DOWEL. Finally, a ¾" hole, 1¼" deep is drilled in the center of the fourth joint (where the arm meets the back leg.) Then glue a 2"-long pivot dowel into this hole, see Fig. 2.

SEAT AND BACK FRAMES

After the side frames are completed, the other two frames are built (one frame forms the seat and the other one forms the back). Both of these frames consist of a redwood frame with cedar slats. And once again, *all* pieces are 2½" wide.

THE FRAMES. To make both the seat (D and E) and back (F and G) frames, cut half laps on the ends of each piece, see Fig. 4. Then before the frames are assembled, cut a ⅜" x ⅜" groove on the four 19"-long pieces (D and F) to house the slats.

This groove must be positioned so the slats are flush with the top face of the frame. To mark the correct position for the

groove, place one of the cedar slats flush with the top face of the frame member, and mark the *underside* of the slat on the edge of the frame member, see Detail in Fig. 4. Then cut the groove so the bottom of the groove is on this line.

THE SLATS. After the grooves are cut, the five cedar slats (L and M) for each frame can be cut to width and length. Once again, these slats are 2½" wide. To determine their length, dry-assemble the frames and measure the distance between the bottoms of the grooves and cut them to this length.

Next, rabbet both ends of the slats, leaving ⅜" x ⅜" tongues to fit the grooves. Also chamfer the top edges of each slat to reduce the chance of splintering.

COUNTERBORE AND PILOT HOLES. After the slats are cut, dry-clamp the four frame members together and drill ¾" counterbores and ⅛" pilot holes at the center of each joint for the lag screws.

Then, before final assembly, two more ¾" holes are needed on the back frame. These holes will accept the pivot dowels on the side frames and are drilled ¾" deep and centered on the outside edges of the side pieces (G), see Fig. 4.

ASSEMBLY. Now the frames can be assembled. Insert the slats in the grooves of the frame, apply glue to the half laps (no glue in the grooves or on the slats), and screw the frames together.

POSITION SLATS. After the glue is dry, tap the slats into position so they're evenly spaced in the frame. Then nail them in place (from the back side) with 3-penny finish nails.

CORNER ROUND. Finally, the four corners of each frame are cut to a 1¾" radius, and then the outside edges are rounded over with a ⅜" corner-round bit.

FIGURE 1

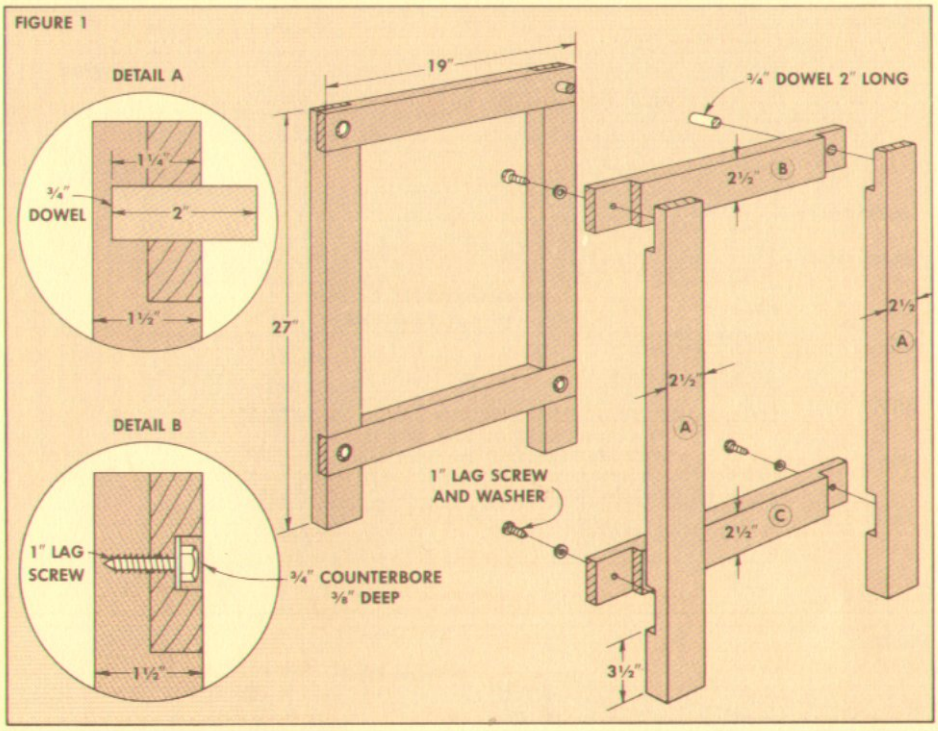

FIGURE 2

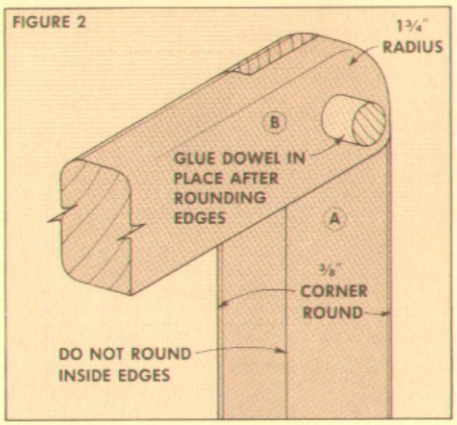

FIGURE 3

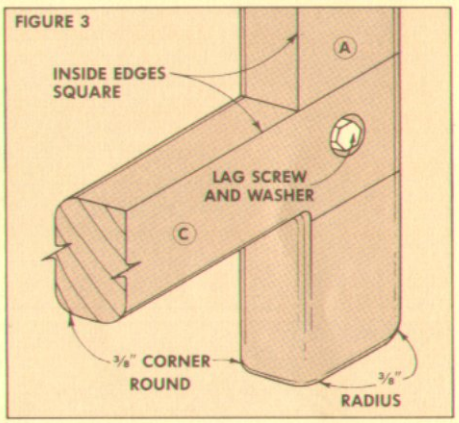

FIGURE 4

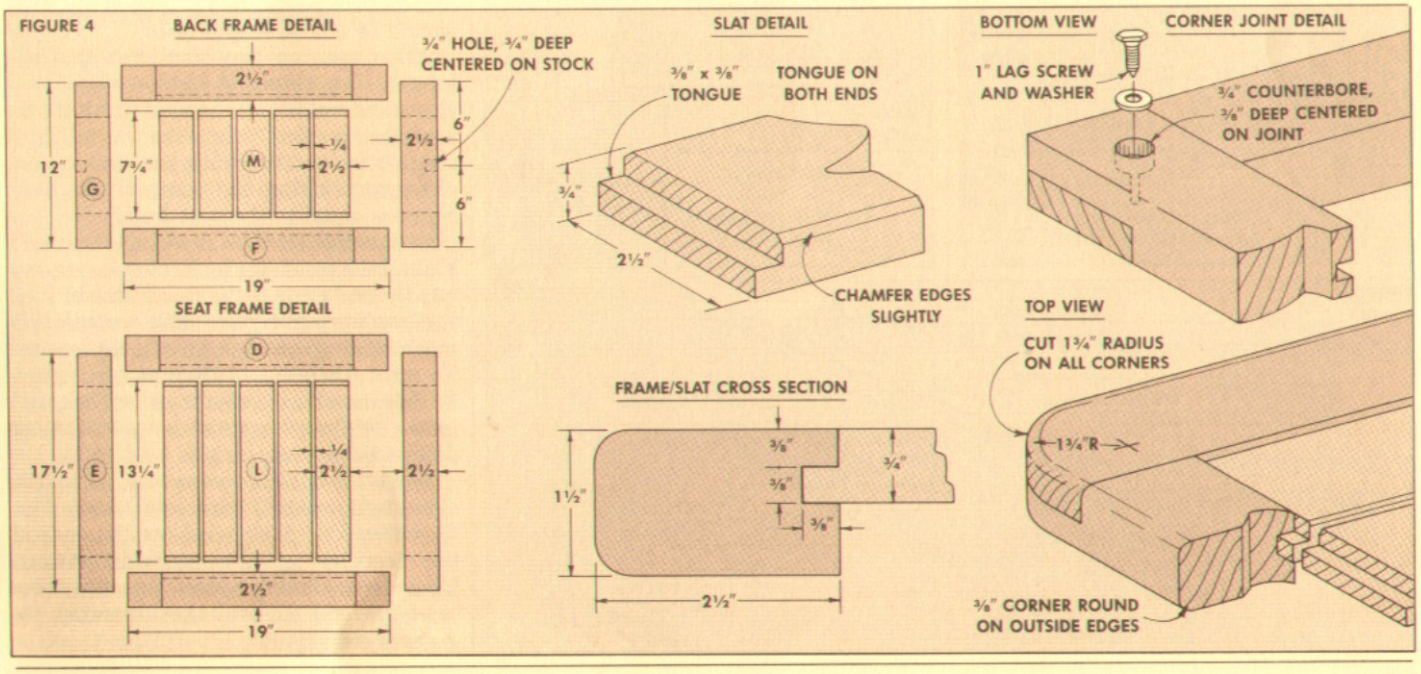

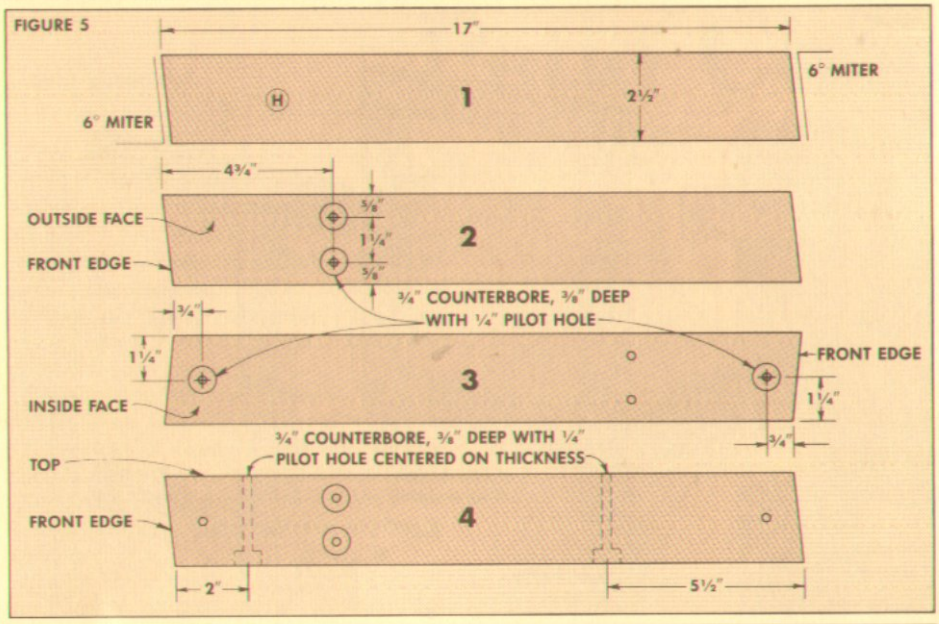

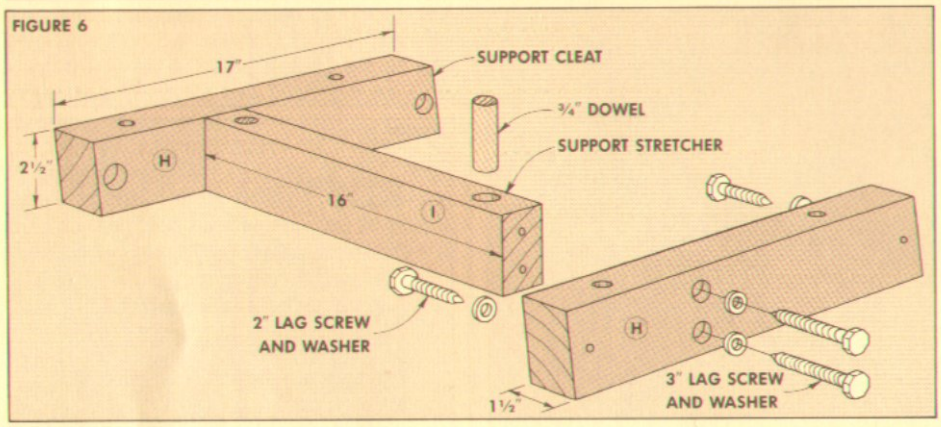

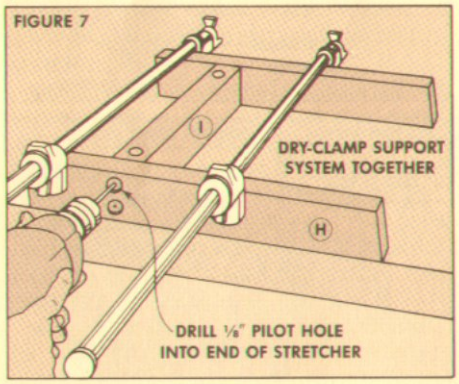

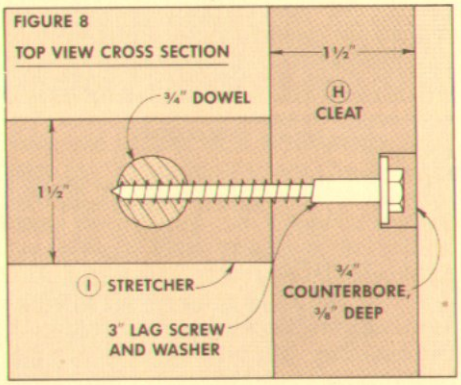

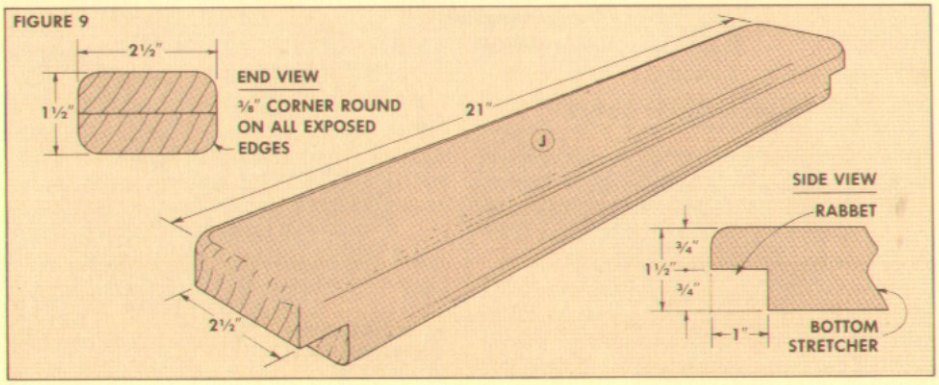

SEAT SUPPORT SYSTEM

At this point the four basic frames for the chair are complete. Next, I added a support system to provide a solid base for the seat frame, and also to increase the overall stability of the chair. The seat support consists of two cleats (H) with a cross stretcher (I) between them, see Fig. 6.

THE CLEATS

To make the cleats for this support system, rip two pieces of redwood 2½" wide and to a rough length of 18". Then miter both ends at 6°, making sure the cuts are parallel to each other, see Step 1 in Fig. 5. The final length of each cleat should be 17" (measured from long point to short point on one edge).

ASSEMBLY HOLES. Next, six holes are drilled in each cleat. Each hole consists of a ¾" counterbore with a ¼" pilot hole drilled all the way through.

The first two holes are used to join the cleat to the cross stretcher. They're drilled so the counterbores are on the *outside face* of the cleat, see Step 2 in Fig. 5.

The next two holes are used to join the cleat to the side frame. They're drilled with the counterbores on the *inside face* of the cleat, see Step 3 in Fig. 5.

And finally, the remaining two holes are used to mount the seat. They're drilled on the bottom edge of each cleat, as shown in Step 4 in Fig. 5.

CROSS STRETCHER

To add stability (that is, to prevent racking) a cross stretcher is mounted between the two cleats.

The length of this cross stretcher (I) must be equal to the width of the seat frame (which should be 19") minus the thickness of both cleats (a total of 3"). This should be a final length of 16".

After cutting the stretcher to final length, dry-clamp it between the two cleats and make sure the total width of this assembly is exactly equal to the width of the seat frame. And while you're at it, also check to see that the width of the back frame is equal to the seat frame.

DOWEL HOLES. The cleats are mounted to the cross stretcher by driving lag screws into the end grain of the stretcher, see Fig. 6. However, end grain does not provide much holding strength for the lag screws. To strengthen the holding power, drill a ¾" hole near each end of the stretcher, and glue a ¾" dowel in these holes so the lag screws have something to hold on to.

When the dowels are in place, clamp the cleats to the ends of the stretcher (see Fig. 7) and drill ⅛" pilot holes into the ends of the stretcher, going through the dowels. Then drive the lag screws into the holes (and dowels) to hold the assembly together, see Fig. 8.

MOUNT SUPPORT SYSTEM

Now the seat support assembly can be mounted to the side frames. This assembly is mounted at an angle to make the chair more comfortable. After a few "test sits" I decided on an angle of 6°. This angle gives the feeling of sitting "in" the chair rather than just "on" it.

To mount the support system, first locate the position of the pilot holes for the lag screws. The ⅛" pilot holes on the front legs are located 9⅝" down from the *bottom edge* of the arm and ¾" from the *inside edge* of the leg, see Fig. 10.

The pilot holes on the back legs must be lower to get the 6° angle (mentioned above). To locate the pilot holes on the back legs, mark a line 11¼" down from the bottom edge of the arm. Then temporarily screw the cleat to the front leg and align the center of the counterbore (on the back of the cleat) with the marked line. Poke an awl through the counterbore to mark the position of the pilot hole. Finally, drill ⅛" pilot holes in the back legs.

ASSEMBLY. Now the seat support assembly can be glued and screwed to the side frames. NOTE: When you're ready to drive the lag screws home, be sure to mount the chair's back frame in position. Apply a coat of wax to the pivot dowels and pop them into the holes in the back frame.

MOUNT THE SEAT FRAME

Next, the seat frame is mounted to the support system. Position the seat frame so it hangs 2½" in front of the front edge of the legs, see Fig. 11. Clamp it in place and use an awl to locate the position of ⅛" pilot holes. Then remove the seat frame, drill the pilot holes, and finally glue and lag the frame into position.

BOTTOM STRETCHER AND CAPS

Although the chair should be pretty sturdy at this point, it's best to add another cross stretcher (J) between the two leg stretchers. This stretcher is cut to length so it's 2" longer than the width of the seat frame. Then cut 1"-wide, ¾"-deep rabbets on each end, see Fig. 9.

After the rabbets are cut, make sure the distance between the shoulders of the rabbets is exactly equal to the width of the seat frame. (This should be 19".) Then round over all edges of this stretcher, and glue it in place, see Fig. 12.

CAPS. Finally, to dress up the side of the chair a little, I added cap strips (K) to cover the side cleats. These caps are ¾" thick and cut to fit between the two legs with both ends mitered at 6°. (To get the ¾" thickness for these caps, I resawed them from 1½" stock.)

FINISHING. I'd suggest using some type of protective stain on this chair. A review of the possibilities is given on page 14.

FIGURE 10

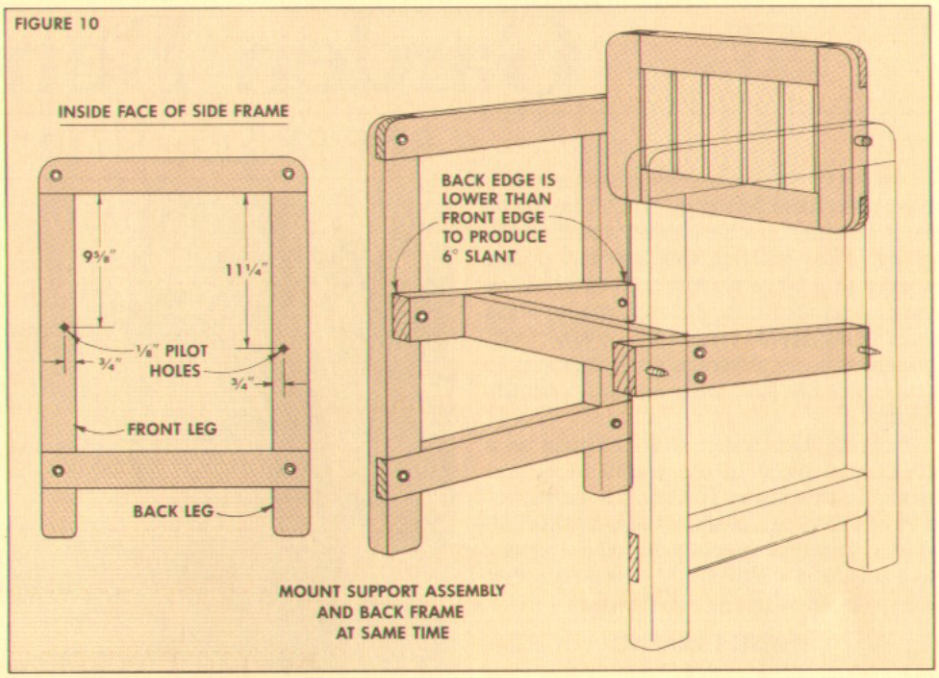

FIGURE 11

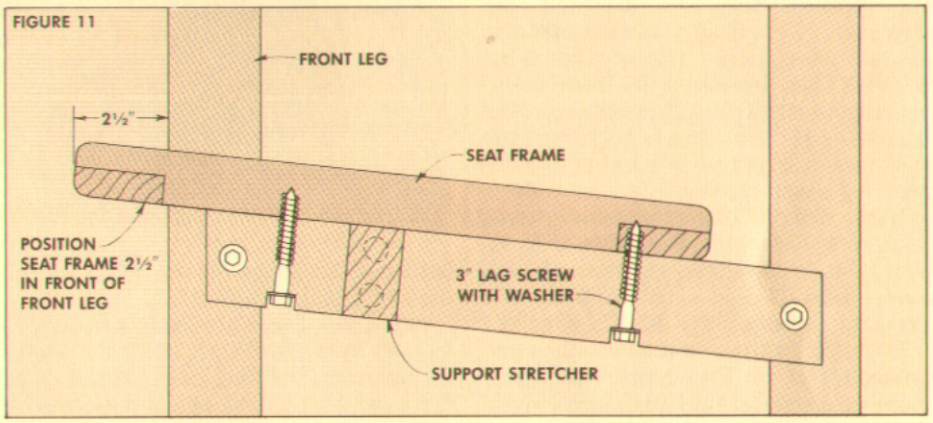

FIGURE 12

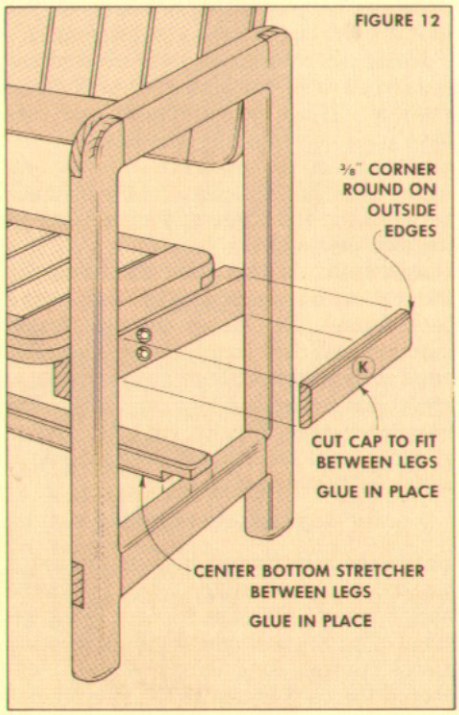

MATERIALS LIST

A	Side Frame Legs (4)	1½ x 2½ - 27
B	Side Frame Arms (2)	1½ x 2½ - 19
C	Side Frame Stretchers (2)	1½ x 2½ - 19
D	Seat Frame Top/Btm (2)	1½ x 2½ - 19
E	Seat Frame Sides (2)	1½ x 2½ - 17½
F	Back Frame Top/Btm (2)	1½ x 2½ - 19
G	Back Frame Sides (2)	1½ x 2½ - 12
H	Support Cleats (2)	1½ x 2½ - 17
I	Support Stretcher (1)	1½ x 2½ - 16
J	Bottom Stretcher (1)	1½ x 2½ - 21
K	Cleat Caps (2)	¾ x 2½ - 14½
L	Seat Slats (5)	¾ x 2½ - 13¼
M	Back Slats (5)	¾ x 2½ - 7¾

CUTTING DIAGRAM

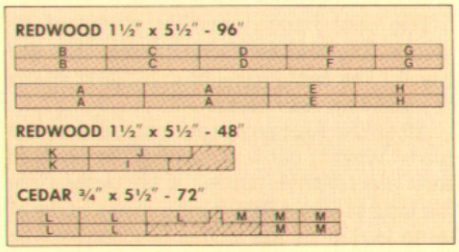

Garden Bench

SIDE BY SIDE SITTIN'

Everyone has a favorite way to relax. For me it's sitting on a bench and watching life go by. After building this bench, I pulled it over to a large walnut tree in my back yard. And there, in the cool shade, I sat back on my bench, propped up my feet, and watched the neighbors mow their lawns. (I guess benches just bring out my romantic nature.)

Actually this bench was designed as a companion piece to the picnic table and chairs in this issue. In fact, the construction of this bench is almost identical to the chairs. The first step is to rip all the pieces to a standard width of 2½". Then I started construction with the side frames.

THE SIDE FRAMES

First, cut the legs (A), arms (B), and stretchers (C) to length, and cut half laps on each piece. (Refer to the drawing on page 9.) Then dry-clamp the frame members together and mark the positions of the lag screws on three of the joints (where the stretches overlap the legs and where the front leg meets the arm.)

Next, drill ¾"-diameter counterbores ⅜" deep at each joint, and follow with ⅛" pilot holes drilled all the way through each counterbore. (I used a drill mounted to a Portalign attachment to drill these holes.)

Everything up to now has been the same procedure as on the chairs. However, there's a change for the fourth joint (where the arm meets the back leg).

Instead of drilling a hole for a single pivoting dowel, I anchored the back frame to the side frames with two dowels. However, I waited to drill these holes until *after* the back frame was assembled.

ASSEMBLY. For now, go ahead and glue and lag screw the side frames together. After they're assembled, cut a 1¾" radius on the top corners (where the arms meet the legs), and round over the outside edges of the frame with a ⅜" corner-round bit.

THE SEAT AND BACK FRAMES

The basic construction of the frames for the seat and back is identical to those on the chair. The only difference is the length of two members on each frame.

The *seat frame* consists of two long pieces (D), and two side pieces (E), see Fig. 1. The *back frame* has two long pieces (F) and two side pieces (G).

After the four pieces for each frame are cut to length, cut half laps at the ends of each piece. Then cut ⅜" x ⅜" grooves in the long pieces. (Once again, use a piece of scrap cedar to mark the position of the bottom of this groove on the inside edge of the long frame members.)

THE SLATS. There are 18 slats (L and M) on each frame, and each slat is 2½" wide. To determine the final length of the slats, dry-assemble the frames and measure the distance between the bottoms of the grooves and cut the slats to this length.

Next, cut rabbets on both ends of the slats to leave ⅜"-thick tongues to fit in the grooves. (If all measurements and cuts have gone according to schedule, the distance between the shoulders of the rabbets on the slats should be equal to the distance between the shoulders of the half laps on the side pieces of the frame.)

ASSEMBLY. At this point the frame for the seat can be assembled (but wait on the back frame). Dry-clamp the seat frame together and drill counterbores and pilot holes at each corner. Then insert the slats, apply glue to the half laps, and screw the frames together. Finally, cut a 1¾" radius at each corner, and round over the edges with a ⅜" corner-round bit.

MOUNTING HOLES

Before the back frame can be assembled, I worked on the mounting system to join the back frame to the side frames. Here, instead of drilling a single hole for a pivoting dowel (as was done on the chair), I anchored the back frame to the side frames with two dowels. This means the back will be at a set angle (it won't pivot), and thus it's a little sturdier.

HOLES IN SIDE FRAME. To do this, the first step is to drill two ½" holes in the side frames. The first hole is centered on the joint where the arm meets the back leg, see Fig. 2. Then a second hole is marked 2½" down from the first one, and ⅝" from the inside edge of the frame.

After the positions of both holes are marked, drill ½" holes, 1" deep on the inside face of both side frames.

HOLES IN BACK FRAME. Then, two matching ½" holes must be drilled on the side pieces (G) of the back frame. The first hole is centered on the length of the side piece, see Fig. 3. To locate the second hole, measure down 2½" (which is the same distance as between the centers of the holes on the side frame). Mark this distance down from the first hole, and drill the second hole.

ASSEMBLY. The last step is to glue ½" dowels into the holes in the side frame, see Fig. 3. Then the back frame can be assembled. (Just follow the same procedure mentioned above for the seat frame.)

SEAT SUPPORT SYSTEM

The seat support system for this bench is similar to the one for the chair, but due to the extra length of the bench (and the

potential for greater racking pressure), I put two stretchers between the cleats (instead of just one as on the chair).

THE CLEATS. Once again cut the two cleats (H) to a rough length of 18" and miter both ends at 6°. Then drill the six counterbores and pilot holes in the cleats (as shown in Fig. 5 on page 10).

THE STRETCHERS. After the cleats are cut and drilled, mark off the length of the support stretchers (I) so the total width of the support assembly is equal to the width of the bench seat. Also drill the ¾" holes at each end of the stretchers for the ¾" dowels. Then the cleats are lag screwed to the stretchers the same way as was done on the chair, see Fig. 4.

FINAL ASSEMBLY

To begin the final assembly of this bench, the support assembly is mounted to the side frames at a 6° angle. To mount this assembly, first locate the position of the pilot hole on the front leg, 9⅝" down from the bottom of the arm and ¾" in from the *inside* edge of the leg.

To locate the pilot hole on the back leg, mark a line 11¼" down from the bottom edge of the arm. Then temporarily screw the cleat to the front leg and align the center of the counterbore (on the back of the cleat) with the line on the back leg. Poke the point of an awl through the counterbore to mark the position of the pilot hole. Finally, drill the ⅛" pilot holes on the back legs.

When you're ready to mount the support assembly to the side frames, be sure to mount the back frame on the dowels. This time, apply glue to the dowels to fasten them into the holes in the back frame. At the same time, glue and screw the support assembly to the side frames.

THE FINAL STEPS

Now it's beginning to look like a bench. All that remains is to add the seat frame and a bottom stretcher.

ADD SEAT FRAME. Position the seat frame on the support cleats so the front edge is 2½" in front of the legs. Poke an awl through the counterbores on the bottom of the cleat to mark the position of the pilot holes.

When I was ready to mount the seat frame, I made one minor addition. To keep this rather long frame from sagging in the middle, I glued an extra slat to the underside of the middle slat on the frame. This extra slat rests on the two support stretchers and holds the seat up.

STRETCHER AND CAPS. Finally, I added the bottom stretcher (J) that goes between the stretchers on the side frames. It's cut 2" longer than the length of the seat, and the ends are rabbeted with 1"-wide, ¾"-deep rabbets. As on the chair, I also added ¾"-thick caps (K) over the cleats.

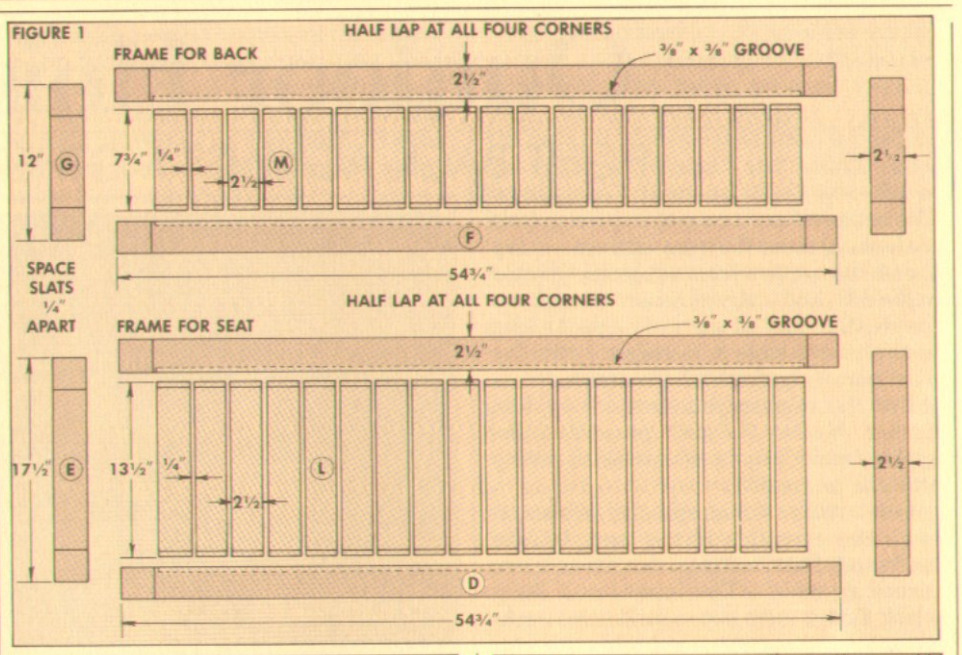

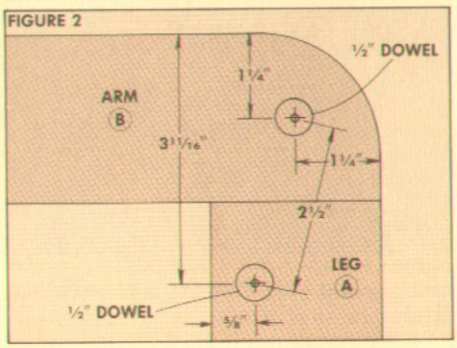

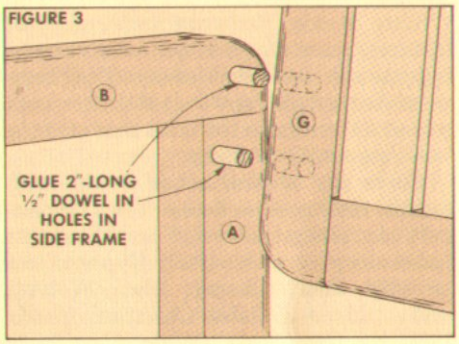

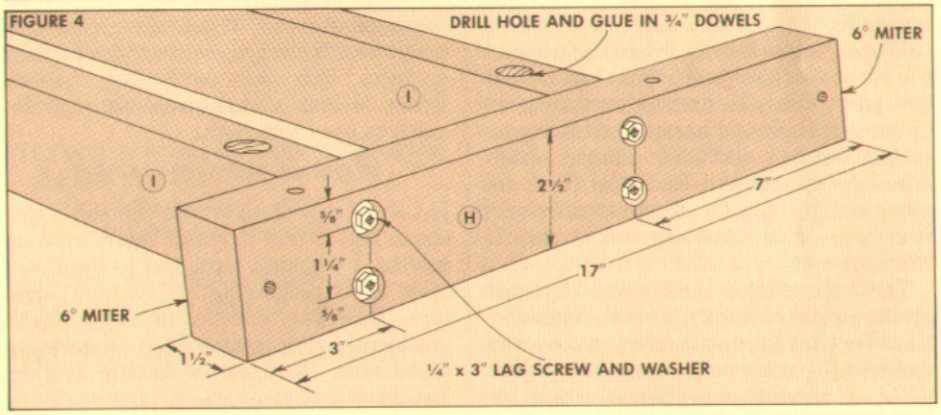

MATERIALS LIST

A	Side Frame Legs (4)	1½ x 2½ - 27
B	Side Frame Arms (2)	1½ x 2½ - 19
C	Side Frame Stretchers (2)	1½ x 2½ - 19
D	Seat Frame Top/Btm (2)	1½ x 2½ - 54¾
E	Seat Frame Sides (2)	1½ x 2½ - 17½
F	Back Frame Top/Btm (2)	1½ x 2½ - 54¾
G	Back Frame Sides (2)	1½ x 2½ - 12
H	Support Cleats (2)	1½ x 2½ - 17
I	Support Stretcher (2)	1½ x 2½ - 51¾
J	Bottom Stretcher (1)	1½ x 2½ - 56¾
K	Cleat Caps (2)	¾ x 2½ - 14½
L	Seat Slats (18)	¾ x 2½ - 13¼
M	Back Slats (18)	¾ x 2½ - 7¾

CUTTING DIAGRAM

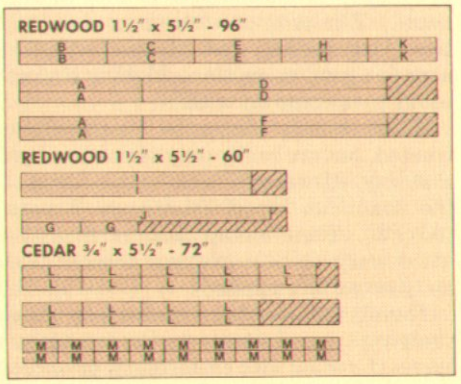

Outdoor Finishes

FIGHT BACK AGAINST MOTHER NATURE

The outdoor furniture in this issue got me to thinking about the irony of trees — they spend their entire lives outdoors, planted in the dirt, and under constant attack from the weather and all sorts of bugs. As long as the tree is alive it manages — for the most part — to fend off all comers.

But the minute you turn a tree into lumber, Mother Nature's protection disappears and it's up to us mortals to supply artificial protection.

Left outside and unprotected, all woods (with the exception of the rare Arizona hardwood, Petrified) are, sooner or later, turned to mulch. The insects and fungi which find a cozy home inside the dark, moist lumber eat the wood into oblivion.

Some woods, Redwood and Cedar for instance, have considerable natural resistance to rot, decay and insects. The heartwood (but not the sapwood) of these woods contains chemical extractives that give the wood immunity to decay.

There are several other woods with natural resistance to decay. The U.S. Department of Agriculture's Forest Products Laboratory classifies Bald Cypress (old growth), Black Cherry, Black Walnut, several kinds of Oaks, Chestnut, Pacific Yew, and Catalpa as "resistant" or "very resistant."

When it came time to select the wood to use for the outdoor projects in this issue, it was pretty easy to narrow my choice to Cedar and Redwood because of their general availability and their natural resistance. But Cedar and Redwood have another thing going for them: dimensional stablity — their tendency not to shrink, warp, or cup.

There is one other kind of wood to think about: pressure treated wood. Pressure treatment involves saturating wood (of a variety of species) with water-borne salts (CCA — chromated copper arsenate, for instance) applied under extremely high pressure. (Wolmanized is one brand name.) This pressure treatment is effective, long lasting, and the protection is about as good as anything Mother Nature could have come up with.

Some woods *claim* to be pressure treated, but are really only stained to look that way. It's best to check for the stamp of the American Wood Preservers Bureau (AWPB). Their stamp assures that the wood really has been pressure treated (and not just surface applied).

There's also another drawback to using pressure treated woods — the treatment leaves the wood with an unsightly greenish or brownish cast, but I'll deal with that later.

In spite of the advantages of using pressure treated wood, I still like the idea of traditional Redwood or Cedar for outdoor projects, and since combining the two woods creates a nice visual effect, I decided to use them both.

FOOLING MOTHER NATURE

If I lived in a place where the sun never shone and it was dry and there were no insects, I wouldn't have had to think any more about protecting my outdoor furniture. However, most of us don't (thank goodness) live in places like that so we're faced with the task of fooling Mother Nature.

Because the sun fades all woods (including those with natural resistance to weather) I wanted to add some color back to the wood — which meant using a stain. Then I wanted to keep the water away from the wood — that called for a water repellent. To preserve the wood, a preservative; and finally a mildewcide to arrest the growth of mildew.

I found out that the oil-based semi-transparent or solid stains sold today come with or without additional preservatives, fungicides and water repellents.

Note: Avoid the really heavy-duty preservative compounds which contain *Pentachlorophenol* which is highly toxic. Many outdoor finishing products contain other chemicals that work just as well and are much safer for use around plants, animals and people.

One other tip: when applying these preservatives/stains, be sure to follow the manufacturer's specific instructions for preparation, application, coverage, and safety.

STAINS. All wood discolors (turns grey or black) when exposed to the double whammy of the sun's ultraviolet rays and water (which leaches the color producing extractives from the wood). Some people like this natural look, and there are even some wood preservative/stains designed to speed up this "aging" process.

But to defeat the elements and retain the look of fresh cut Redwood or Cedar, it's necessary to *add* color to the wood with a stain.

Semi-transparent stains contain fewer pigments and come closest to approximating the natural look of freshly cut wood.

Solid stains, on the other hand, contain a higher concentration of pigment which can rub off on clothing, shoes — and you. Solid stains are *not* recommended for outdoor furniture or decks.

WATER REPELLENCY: The oil base of preservative/stains acts as a water repellent, but some manufacturers add parafin wax as additional protection from water.

INSECT PROTECTION: The extractives in

Redwood and Cedar provide natural protection against termites and other insects that feed on wood. (Pressure treated wood is probably even more insect resistant.) The additional combination of all the chemicals contained in stains and preservatives, plus keeping the moisture out, will make stained wood an unlikely and inhospitable home for insects. In any case, termites and other insects like to do their damage in dark, damp, undisturbed places, so if you're using your outdoor furniture a lot, you'll disturb the critters more than they'll disturb the furniture.

If termites are a real problem, you'll want to check with an exterminator for treatment advice tailored for your area.

PRESERVATIVES: Over the years, a number of products have been used to protect wood from decay and rot — creosote and other tars, for instance. Obviously they aren't suitable for a picnic table, bench, or chairs. Other preservative elements such as *Pentachlorophenol* are toxic and should be avoided.

The oils in oil-based stains also act as preservatives, but some manufacturers add TBTO (Tributyltin Oxide), a preservative which is non-toxic after it has dried and "bonded" to the wood.

FUNGICIDES: Protective stains on the market today often contain chemicals to make the wood resistant to mildew.

Folmet and *Chlorophalonil* are fungicides incorporated in some preservative/stains, but the manufacturers point out that the chemicals are there only to *keep mildew out after application*. So if there's mildew on the wood at the time of application it's likely to grow through the coating of stain applied over it. If mildew is present, remove it by scrubbing the wood with a solution of household bleach and water before applying the stain.

APPLYING THE STAIN/PRESERVATIVE

There's a minor "Catch 22" to applying oil-based preservative/stains: They penetrate the surface of rough wood better than the surface of smooth wood. But to eliminate unfortunate surprises (splinters), the furniture needs to be sanded smooth. What to do?

There are two solutions: Go ahead and apply the finish to the smooth wood, and re-apply it more frequently as time and the elements begin to weather the wood. Or you can let the furniture weather naturally outside for a couple of weeks — maybe even a month or two — to open up the pores so the wood will accept the finish better.

There's little chance that the relatively few weeks of untreated weathering will adversely affect the color of the wood.

Note: With pressure treated wood, it's especially important to let it weather for a while before applying a stain (which is all that's really needed because of the durability of the wood). Semi-transparent stains work well on treated lumber if there aren't any visual distractions such as mill stamps or other markings on the wood. If there are, sand them off, or position the boards so the markings are hidden.

When you get around to applying the finish, make sure the wood is *as dry as possible*. If you put an oil-based preservative/stain on wet lumber, you're just asking for trouble.

How many coats of stain do you put on? The answer depends on which product you're using. Most manufacturers recommend putting a second coat on right after the first. These first treatments usually last for about four years. You may have to apply interim coats sooner, depending on the climate and amount of wear and tear your furniture is subjected to.

WHAT WE USED

We tried out seven different varieties of stain/preservatives manufactured by Olympic Stain and the Darworth Company (Cuprinol) only to end up using Olympic Wood Preservative (Clear) because we liked the way the picnic table, chairs and benches looked in the photographs.

Naturally, it's always a matter of personal opinion when it comes to selecting just the "right" finish.

Both the Olympic and Cuprinol stains worked well on samples of Redwood and Cedar. Both companies feature colors which approximate the natural color of Redwood and Cedar; both companies make oil-based stains with preservatives in them.

Here's what we tried:

- **OLYMPIC SEMI-TRANSPARENT LINSEED OIL**
  Redwood, #704
  Cedar Natural Tone, #716
  Redwood Natural Tone, #717
- **OLYMPIC WEATHER SCREEN**
  Cedar Natural Tone, #716
- **OLYMPIC CLEAR WOOD PRESERVATIVE**
- **CUPRINOL SEMI-TRANSPARENT STAIN AND WOOD PRESERVATIVE, WATER CLEAN UP**
  New Cedar, #W67
  Sierra Redwood, #W21

TEST RESULTS

Here are some of our general comments about these products.

MIXING. The Olympic Semi-transparent linseed oil stains were more complicated to mix before using. The instructions call for pouring off the oils, and then gradually adding them back as you stir up the pigments. Olympic's Weather Screen and Clear Wood Preservative, and the Cuprinol Semi-transparent stain/preservatives were less complicated to mix.

PRESSURE TREATED. None of the stains we tried would adequately cover the markings which show up on pressure treated wood, but they're not designed to do so. The only pressure treated wood we had in the shop was "fresh" and hadn't been "weathered." Even so, the stains did a fairly good job of covering the greenish tint, but we agree with the manufacturers about letting pressure treated wood weather (to fade the green) before applying stain.

CLEAN-UP. The Cuprinol Semi-transparent stains — even though they're oil-based — are water clean-up, and that's a definite plus.

APPEARANCE. In our tests, both the Cuprinol Semi-transparent Stain and Preservative and the Olympic Weather Screen (both of these products contain water repellents) left more pigment on the surface of the wood than did the Olympic Semi-transparent linseed oil stains (which don't have an additional water repellent or as many preservatives).

COVERAGE. A gallon will more than cover all the projects we built — even applying two coats. The Olympic Semi-transparent linseed oil stain came in quarts; the rest you have to buy in gallons.

COLORS. The manufacturers of both products recommend testing their stains on a sample of wood beforehand. At the local lumber yard where we purchased the stains we used, they had some samples (kind of like paint swatches, only on wood) of different stains applied to different woods. These swatches didn't produce an exact match with the finished product, but they were pretty close.

WATER REPELLENCY. The difference between the stain/preservatives with water repellents added and the "plain" stains was really obvious — especially when we dripped water on the samples. If you want extra protection against water — buy one of the products with a water repellent added.

And the last thing we did before setting the furniture outside was to give it a liberal coating of clear furniture wax — nothing like a little "extra" protection.

WHERE TO BUY PRESERVATIVE/STAINS

The preservative/stains we used are generally available throughout the country. In the case of Olympic stains, (Olympic Stain, Bellevue, WA 98004) the quickest way to locate a dealer is by looking in the Yellow Pages under Paint.

Cuprinol products (The Darworth Company, Avon, CT 06001) are sold in all 50 states through distributorships. If you can't find a supplier, call Darworth (203-677-7721) and ask for the name of a distributor near you. A second call to the distributor will get you the name of a retail outlet for Cuprinol.

Tools of the Trade

A REVIEW OF CARBIDE-TIPPED SAW BLADES

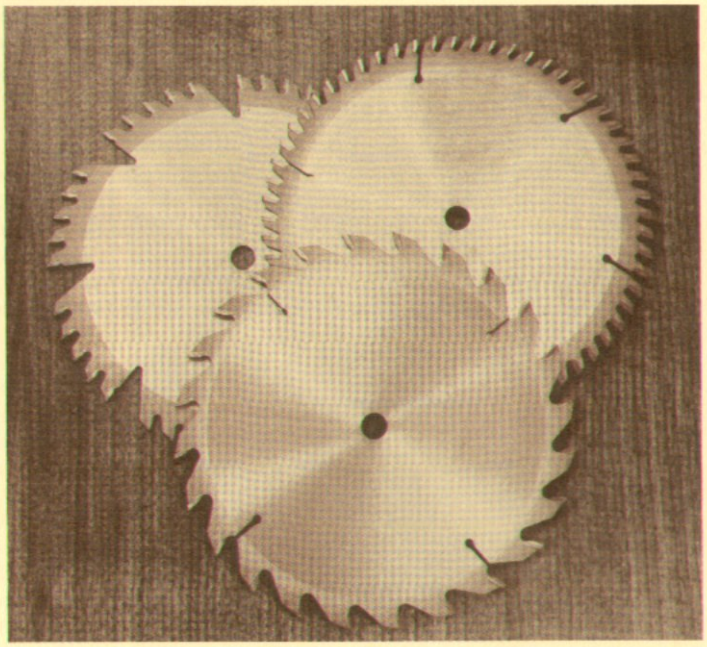

I can still remember the day I purchased my first table saw (a dream come true). I was so excited I could hardly stand it. After making a cut on the closest piece of wood, I examined the piece expecting to find *the* perfect edge. Boy was I surprised! The finish was so poor I would have been better off using a hand saw.

I double checked every possible adjustment on the table saw, only to discover that the culprit was the blade, not the saw. So I decided to stretch my already taxed budget, and buy a *good* saw blade.

After listening to a sales pitch on the virtues of using carbide-tipped blades, I described to the salesperson the type of cutting I would be doing most often so I'd be sure to get the right blade. "No problem," he said, "here's the saw blade for you." "Yes siree bob, that sure looks like a nice blade," I thought.

So much for looks. I found out (too late) that the blade was designed for a totally different purpose than I wanted. The end result was that I had wasted $50 on a blade which now hangs on the wall collecting sawdust rather than making it.

I decided there had to be better sources of information on how to choose the correct saw blade, but after looking, I really couldn't find one. That's when I decided to contact some professionals: Carlo Venditto, Executive Vice President of Freud, Bob Pirrone of Forrest Manufacturing Co. (both carbide-tipped saw blade manufacturers), Paul Naylor, President of Keo Saw (a professional sharpening service), and two metalurgists. I figured if anyone could tell me how to both determine the quality of a saw blade, and how to choose one, they could.

WHY CARBIDE-TIPPED?

Saw blades fall into two general categories: *steel* saw blades, and *carbide-tipped* saw blades. The only difference between the two is that carbide-tipped blades have small pieces of tungsten carbide brazed to the steel body to form the cutting edges. The effect this has on performance is dramatic.

RETAINING AN EDGE. Retaining an edge longer than a steel blade (usually at least 10 times longer) is one of the biggest advantages of a carbide-tipped blade. That ability results from the extreme hardness of the tungsten carbide.

QUALITY OF THE CUT. The quality of cut produced by a saw blade relates directly to the *sharpness* of the tips. This is where carbide-tipped blades can make a big difference, since they seem to stay sharp forever.

Okay, so carbide-tipped blades outshine steel blades in every aspect, right? Well not quite. The most obvious drawback to carbide-tipped blades is their initial cost — usually $35 to $170. Whereas steel blades run $5 to $20.

But comparing only the initial costs can be deceiving. Carbide-tipped blades require sharpening less often than steel blades. So, in the long run, the cost of a carbide-tipped blade is often no more than a steel blade when you figure in the cost of repeated sharpening.

QUALITY VARIATIONS

Once you've decided to take the plunge and buy a carbide-tipped blade, the first thing you're faced with is determining the general quality of the blade . . . while it's sitting on a store shelf. Although many of the quality controls taken during the manufacturing process can't be seen, luckily there are a few tell-tale signs that indicate the level of workmanship.

THE PLATE. When a saw blade is born, it starts out as a circular piece of very soft steel. This steel plate is hardened by tempering the steel (alternate heating and cooling). The care taken in this procedure can make the difference between a high quality saw blade, or just a round piece of steel.

On higher quality blades, the plate is often tempered twice to achieve a hardness ranging from C-42 to C-46 on the Rockwell C hardness scale. On lower quality blades, the plate is sometimes made with cold-rolled steel that's not tempered to the correct hardness, or not tempered at all.

The quality of the tempering process can not be detected just by looking at a blade. However, there is a way to roughly determine the quality of the steel used in the plate. Simply grasp the blade with both hands, and try to bend the plate by applying moderate pressure with your thumbs near the center of the blade. If the blade has been tempered correctly (in the range of C-42 to C-46), the plate will be rigid enough to resist any attempt at bending.

PLATE TOLERANCES. The plate tolerance, or the "runout" of the saw blade is one of the key tests of quality for any individual blade. Plate tolerance is important because it directly influences the quality of the grinding on the teeth. If a blade wobbles from side to side, it's impossible to grind the teeth precisely.

Plate tolerance also becomes a quality factor because of the effect of harmonics, or high speed "flutter." This phenonemon produces vibrations in a blade running at full speed that can transform a .005″ plate tolerance into a .010 to .015″ wobble.

Most high quality blades have plate tolerances of less than .003″, and there are a few blades on the market that have plate tolerances below .001″. These new blades run extremely smooth — and also very quiet.

To determine a blade's plate tolerance, check the promotional literature on the blade. Usually, if the blade is manufactured as a high quality product, the company will tout its demanding tolerances.

MAXIMUM RECOMMENDED RPM. The maximum RPM rating is important because it defines the maximum speed at which each blade can be operated safely, without succumbing to the centrifugal forces that are created within the spinning blade.

To get a picture of the amount of destructive force on a blade, visualize the outer rim on a 10″ blade traveling approximately 100 MPH . . . in a 10″ circle. Then imagine introducing this spinning steel blade to a piece of hard maple — it's really surprising that it doesn't fly apart immediately.

Most blades have the maximum RPM rating stamped on the plate, or listed in the product literature that comes with the blade. On higher quality blades, the maximum ratings will be 7000 RPM, or even higher. And on a lower quality blade, this rating can be as low as 3-4000 RPM — which is below the speed of some 10″ table saws.

EXPANSION SLOTS. Most blades have "expansion slots" cut in the body of the blade, running from the rim toward the arbor hole. The purpose of the expansion slots is to give the blade some "room" to expand as it heats up during use. A blade with no expansion slots is more susceptible to warping as it heats up. As a general rule, the more expansion slots (8 slots are about the maximum on a 10″ blade), the higher the quality of the blade.

GULLETS. The main purpose of a gullet is to provide clearance for the chips being removed. Even though their purpose is simple, everyone seems to have their own opinion on what shape to use.

The only gullets that should be avoided are ones with sharp, or square corners. These sharp points can actually cause the blade to crack (See Talking Shop, *Woodsmith* No. 26), by concentrating stress at a single point. And on top of that, they also inhibit chips from being projected from the blade, which causes the blade to clog easily.

THE TUNGSTEN CARBIDE. And finally we get to the whole point of the saw blade — the carbide tips. There are more than 30 different grades of tungsten carbide used to make cutting tips for saw blades, each grade with its own characteristics. Trying to determine the quality differences between the different grades is really more of a job for a metalurgist, than for a woodworker.

The most apparent difference between the carbide tips on different saw blades is their size. The size of the carbide tip can range from 5/32″ to 13/32″ long, and 1/16″ to about 3/32″ thick. Larger tips simply extend the life of a blade by extending the number of sharpenings that can be performed before the tips wear out.

BRAZING THE CARBIDE TIPS. The process of brazing (high temperature soldering) the tips to the steel is one of the more critical aspects in the construction of a carbide-tipped blade. Two methods are commonly used to braze tungsten carbide to steel: machine induction brazing, and hand brazing with an acetylene torch.

There's a questions about which method produces the best bond between the carbide tip and the blade. The answer seems to depend on who you're talking to. So I contacted an (impartial) engineer specializing in metalurgy, and found that either method can produce a very secure bond, if done properly.

Evidently, the biggest danger is in overheating the blade and destroying the temper. Overheating can also cause gas pores, or pin holes in the brazing compound. Usually these pores are only on the very surface of the alloy, but occasionally they do penetrate further into the joint, weakening the bond.

Naturally, temperature can be more accurately controlled with automatic machinery than with a hand torch. This is supported by the fact that the only pinholes we found were on a blade which was brazed by hand. But as long as the tips don't actually fall off, the brazing is doing its job.

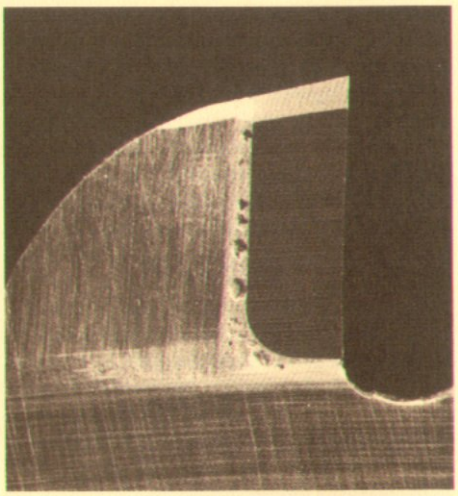

HAND BRAZED. Hand brazing can produce pin holes due to inconsistent heating.

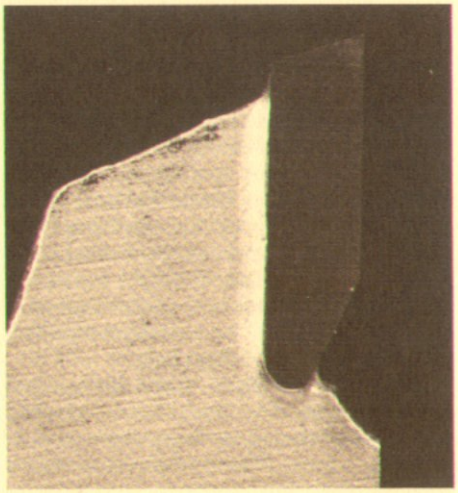

MACHINE BRAZING. Consistent joint without pinholes due to total heat control.

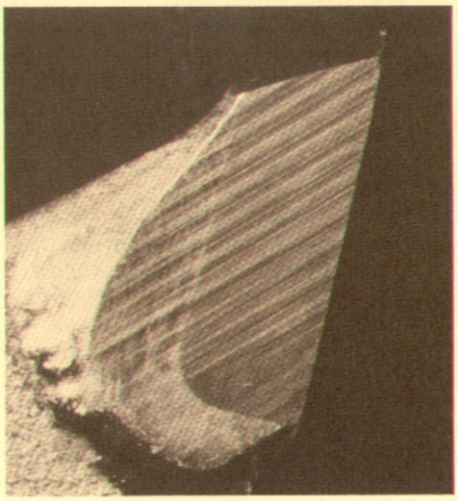

COARSE. Grinding marks indicate only a coarse wheel was used to sharpen the tips.

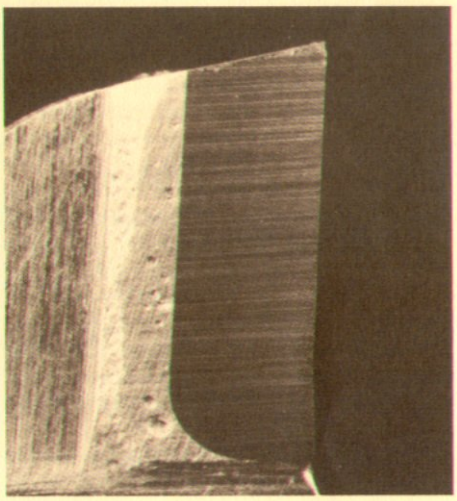

FINE. Shinny, mirror-like finish designates sharpness obtained by very fine grinding.

THE TOOTH GRINDING. How well the carbide tips are ground is another way to check overall quality of a carbide-tipped saw blade. To achieve the highest level of quality, the tips should be ground with two different grades of diamond wheels (diamonds are about the only material that can be used to grind tungsten carbide).

The first, or roughing-out pass is made with a coarse (180-grit) diamond wheel. Then a second pass is made using a finishing (400-grit or finer) diamond wheel.

To determine whether or not a blade has been finish ground, check the top, face, and sides of the carbide tips for a shiny, mirror-like smoothness. (Using a small hand lens can be a big help in seeing the differences.)

If the tips show any signs of grinding marks, it means the manufacturer hasn't taken the time to use the very fine diamond wheel on the final pass — and that the blade isn't as sharp as it could be.

CHOOSING A BLADE

Beyond the quality of the saw blade, you'll also need a blade specifically designed to achieve the highest quality results for the type of cutting being performed. To achieve the highest quality results while ripping, you need a blade that's designed specifically for ripping. Crosscutting is the same — only a true crosscut blade can produce the highest quality results. In other words, there's no such thing as a universal saw blade for making the perfect cut every time on everything.

Finding a saw blade that's designed to match the type of cutting you do most often is probably the most important part of choosing a blade. The first step is to know how the different variables are used to fine-tune carbide-tipped blades to perform different cutting actions.

The most common variables are: individual tooth configurations, number of teeth, and the hook angle of each tooth. Understanding the way these three factors work together de-mystifies the type of cutting a blade is designed for, and what you can expect of it.

TOOTH CONFIGURATIONS

Choosing the correct tooth configuration is important because it's what determines how, and how well the teeth actually remove material. The tooth configuration is nothing more than a profile ground on the top surface of the carbide tips. The other two surfaces (the sides and the face) of each carbide tip are usually kept flat, or slightly tapered.

There are four common profiles used in grinding the tips of circular saw blade teeth: flat top, alternate top bevel (ATB), triple chip, and a combination profile. Each of these profiles has its own personality, including — pardon the pun — some good and bad points.

FLAT TOP. On a flat top tooth configuration, the top of each individual tooth is ground square, perpendicular to the sides of the blade.

This style of grinding offers two distinct advantages. First, it provides the most support for the cutting edge of the tooth, since the entire width of the tip is being used. Second, the cutting edge will last longer because the teeth wear out evenly along the entire width, not just on one point.

The most common drawback to using a saw blade with a flat top profile is the finish it produces. The blade takes bites out of the board that are as wide as the entire width of the kerf. Because the chips being removed are large, they have a tendency to tear out, leaving a rough surface.

ALTERNATE TOP BEVEL. The alternate top bevel (ATB) profile is almost self explanatory: the tops of alternating teeth are beveled to one side of the blade or the other, so each tooth cuts only *one* side of the kerf.

Using the ATB profile, each tooth is removing only very small chips. This is why an ATB profile produces such a high quality finish, and why it's the most common profile for circular saw blades. ATB is found on rip, crosscut, and combination blades, and is also common on finish blades that use high numbers of teeth to produce an extremely high quality finish.

One drawback to this design is that it forms an inverted V, when cutting grooves and dados (a flat top profile produces a flat bottom). The very tip of the cutting edge on an ATB profile dulls quicker than most other blades because this is the area that does most of the cutting.

TRIPLE CHIP. A triple chip tooth configuration uses two different tooth profiles, one for the "chipper" tooth, and another for the raker tooth. The chipper tooth looks like a tooth ground to a flat top profile with both outside corners chamfered off. The purpose of the chipper tooth is to "score" the material in the center and along both edges of the kerf. Then the flat top raker tooth follows through and cleans everything up.

This tooth configuration is normally used on saw blades designed for very high quality finish, and are used to cut laminated counter tops, particle board, plastic laminates.

COMBINATION. Finally, there's a combination tooth configuration that's really nothing more than a hybrid of the alternate top bevel profile, and the flat top profile. It's usually used on blades that are designed to both rip, and crosscut hardwoods and plywoods.

Normally the teeth on a combination blade are grouped together in sections of five teeth — four are ATB, followed by a flat top raker tooth to speed up removal of the material during ripping operations. The combination of both profiles helps keep the blade from becoming clogged with chips, yet keeps the high quality of finish.

Another aspect of the combination blade that helps keep the rate of feed fairly high for ripping is the large gullets in front of the raker tooth. This gullet just helps clear out the chips a little quicker.

TOTAL NUMBER OF TEETH

The total number of teeth can be the one variable that has the most noticeable effect on the cutting action of a carbide-tipped saw blade.

As the number of teeth on a saw blade increases, the distance between teeth is decreased. This reduces the size of the gullets of the blade and makes chip ejection from the kerf more difficult. A blade with a high number of teeth also requires more

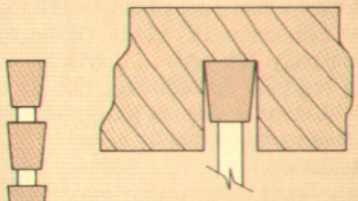

FLAT TOP
This style of tooth uses only one grinding profile — flat across the top, and produces a flat bottomed kerf.

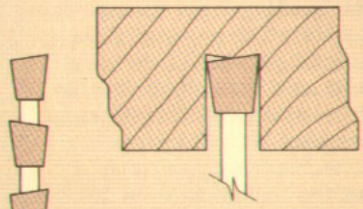

ALTERNATE TOP BEVEL
This profile produces a fine finish (and a kerf in the shape of a V), and can be used on any style of blade.

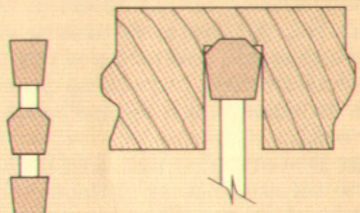

TRIPLE CHIP
The triple chip profile incorporates two styles of teeth, a beveled chipper, and a flat topped raker tooth.

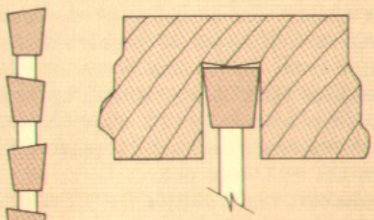

COMBINATION
This multipurpose grind combines the flat top, and the ATB profiles for ripping and crosscutting hardwoods.

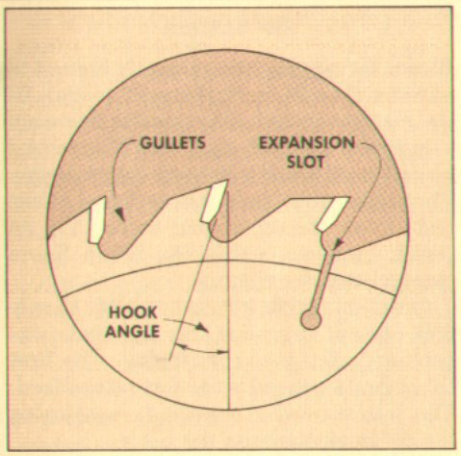

RIP BLADE

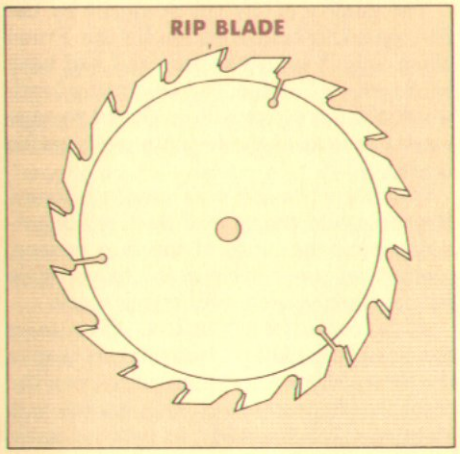

CROSSCUT BLADE

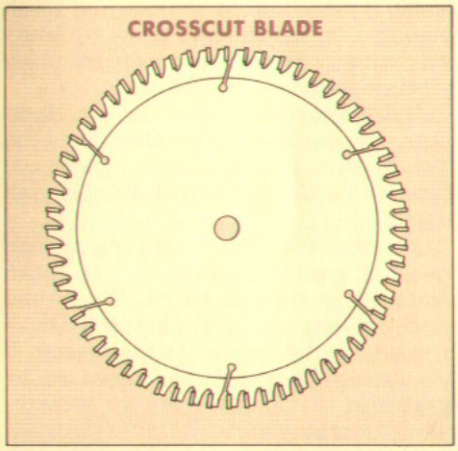

COMBINATION BLADE

power to operate, more feed pressure, and a slower rate of feed.

Under ideal situations, only three teeth should be cutting at one time. One should be leaving the piece, one cutting in the center, and one just entering the piece. To maintain this optimum cutting situation, the total number of teeth should decrease as the thickness of the material increases.

HOOK ANGLES

The hook angle on each tooth is another key factor in determining the characteristics of a saw blade. The hook angle is nothing more than the amount of forward lean each tooth has.

Basically, the more hook angle a blade has, the more pull, or grab the blade will have on the workpiece. One effect of this pulling action is that the rate of feed tends to be faster whenever the hook angle is increased.

Reducing the hook angle also reduces both the amount of grab the blade exhibits, and the rate of feed. Cutoff saw blades are a good example of when a smaller hook angle would be used to prevent the blade from grabbing, or "running" through the piece being cut.

In fact, as the hook angle approaches, and even exceeds 0° (producing a negative hook angle — or when the teeth lean backwards), the blade exhibits no grabbing effect at all. This is extremely important when cutting metals, where total control over the rate of feed is needed.

RIP BLADES

When choosing a blade for ripping, the highest concern is usually with the rate of feed, and not the quality of the finish. To provide a rip blade with the highest rate of feed, several different aspects are addressed.

First, the hook angle on each tooth is increased to about 20° to help pull the workpiece into the blade. Unfortunately, this extreme forward lean also increases the impact on each tooth during the cutting process.

To prevent the carbide from breaking under this added load, many manufacturers use a slightly softer carbide on their rip blades (Freud uses a softer C-2 grade, rather than their normal C-4, which is harder and more brittle). A flat top tooth configuration is also the most popular because it provides the maximum support for the tip.

Second, to prevent the high rate of feed from overloading the blade with wood chips, the number of teeth are kept to a minimum. In fact, some people believe that when it comes to a rip blade, the number of teeth is more important than the tooth configuration. The maximum number of teeth on a 10" rip blade is commonly considered to be 24 teeth.

CROSSCUT BLADES

The main differences between a crosscut blade and a rip blade are the number of teeth, the hook angle, and the tooth configurations. In other words, they're completely different.

Crosscut blades are usually used for obtaining a high quality finish when doing cut-off work. To produce a higher quality finish, cut-off blades use a higher number of teeth (40 plus) in comparison to a rip blade (24 or less).

If this many teeth were used on a rip blade, they would create an instant clogging problem. But when used on a crosscut blade, there are several reasons why they create no problems at all.

First of all, the hook angle on a crosscut blade is usually kept within 0° - 7°. By keeping the hook angle in this range, the amount of grabbing is kept to a minimum, or even completely eliminated (a necessity for use on the radial arm saw). The real advantage to this is the total control it gives over the rate of feed.

Most material being trimmed with a crosscut blade is fairly narrow. This helps eliminate any problems associated with using a higher number of teeth because the blade usually isn't in the wood long enough for the chips to clog up the smaller gullets between the teeth.

Using a different tooth configuration also helps a crosscut saw blade produce a finer finish than a rip blade. The most common profile is the Alternate Top Bevel for all-purpose crosscutting of solid wood. Another profile that's usually used for crosscutting plastic laminates, or particleboard is a Triple Chip profile.

COMBINATION BLADES

Obtaining perfection on every cut is impossible with any one blade. But there is a type of blade that can achieve a fairly high level of quality over a wide range of cuts . . . combination blades.

There are two distinct characteristics that make combination blades unique. First of all, combination blades use a hybrid tooth configuration that's simply called a "combination" profile. This profile allows the blade to either crosscut or rip without any major drawbacks to either operation.

The second major distinction of a combination blade is the large gullet in front of the raker tooth. This oversized gullet helps improve chip removal during rip operations, thus increasing the rate of feed.

Combination blades are usually available with 40 to 60 teeth. Naturally, the higher tooth count will create more resistance while ripping, and the rate of feed will be slower. But the finish achieved while crosscutting will be improved as the number of teeth increases.

SPECIFICS

At this point, all of this information is basically just a lot of talk. The true test of the quality of a blade is getting it in the shop, and making some sawdust. So I purchased a variety of carbide-tipped blades and put them through the *Woodsmith* shop test.

I separated the blades being tested into two categories: standard carbide-tipped saw blades, and the new generation of "super" carbide-tipped blades. For testing the standard blades, I purchased two commonly available and reasonably priced brands: Sears and Freud.

The new "super" carbide-tipped blades I tested were the *Mr. Sawdust Blade* manufactured by Forrest Manufacturing ($162), and a Teflon coated, "anti-grip" cut-off blade ($110) manufactured by Freud.

The chart on page 21 gives the results of the quality tests on the blades tested. As for our opinions and recommendations, here goes . . . .

The standard saw blades can be divided into three categories: Rip blades, Crosscut blades, and Combination blades. In each category, several blades were tested. In some cases, the blades being tested were technically identical, and in others, the blades were slightly different.

COMBINATION BLADES

The three combination blades I tested were: a 40-tooth Sears blade that uses an ATB profile, and 40- and 50-tooth Freud blades that use the combination profile.

THE FREUD COMBINATION BLADES. Both the 40- and 50-tooth Freud combination blades have four ATB teeth and one raker tooth, which is the typical "combination" tooth configuration. The only difference between the two blades is the number of teeth — the 40-tooth being the most commonly recommended.

Ripping was one operation where the combination profile performed better than a rip blade in one aspect, and worse in another. The combination profile requires a slower rate of feed, but in the process, it also produced a considerably improved finish.

As expected, the extra 10 teeth on the 50-tooth blade slowed the rate of feed even more than the 40-tooth model, but it also produced an even higher quality finish. In fact the 50-tooth version produced a finish that I considered good enough for edge gluing (without being run through a jointer).

On plywood, the 40-tooth blade produced more chipout on the face and the back edge than the 50-tooth blade. Also, the 40-tooth blade produced a rougher cut, while the 50-tooth blade produced an extremely high quality finish.

SEARS 40-TOOTH COMBINATION BLADE. The Sears 40-tooth combination blade uses an ATB tooth configuration, as opposed to the combination profile of the Freud blades.

One effect of using an ATB tooth profile on the Sears blade is that the rate of feed is much slower. This is due to the lack of any large gullets, which are part of the "combination" tooth configuration.

But what really surprised me was how the Sears blade compared to the Freud blade when ripping hardwood and plywood. The quality of cut produced by the ATB profile Sears blade was definitely lower than the Freud blade. And considering the only real difference between the tooth configurations on these two blades is the addition of a raker tooth on the Freud blades, the overall quality of the Sears blade becomes suspect.

On the other hand, the crosscutting quality of the ATB profile on the Sears blade was equivalent to the 40-tooth Freud blade, and it actually had less chipout on the surface of the piece being cut.

CONCLUSIONS. The biggest advantage to any combination blade is its ability to both rip and crosscut. But they also have a reputation of being a jack of all trades . . . and master of none.

Of the three combination blades tested, I felt the 50-tooth Freud combination was the best all-round blade. Although the rate of feed is slightly slower when ripping, the improved quality of the edge produced makes this blade the closest to a "do all" blade of any I tested.

CROSSCUT BLADES

The crosscut blades I tested included a Sears 72-tooth ATB blade and a Freud 60-tooth Triple Chip blade.

When crosscutting hardwood, the ATB profile on the Sears blade produced a fair amount of chipout on the top face of the piece, and a very large amount on the back edge. The Triple Chip profile of the Freud blade also produced a small amount of chipping on the top face, but there was nowhere near the amount of chipout on the back edge compared to the Sears blade. As far as the quality of the cut, both blades produced an extremely smooth finish, and neither seemed better than the other.

When both blades were used for cutting plywood, the overall performance of the ATB profile on the Sears blade came out on top, although the quality of the cut still wasn't up to the level produced by the Freud 50-tooth combination blade. When the Freud 60-tooth Triple Chip blade was used for cutting plywood, it produced an excessive amount of chipout on the bottom face.

Even though both blades are designed for crosscutting, they can be used for final ripping of stock when an extremely fine

RIP BLADES

Blades for ripping are generally limited to no more than 24 teeth (for a 10" blade). Of the blades I tested, only one fits this mold — a Freud 24-tooth rip blade. The second blade I tested was a 30-tooth Sears model. The reason this blade was included in the test, even though it had more than 24 teeth, is because it's the blade Sears recommends for ripping.

FREUD 24-TOOTH RIPPING BLADE. It only took one cut to realize that this blade was genuinely designed for ripping. The first thing that's noticed is the fast rate of feed. This was somewhat expected, considering the 20° hook angle on the blade.

The quality of the cut produced by the flat top tooth configuration on the Freud blade wasn't nearly as poor as I had been led to expect. In fact, when cutting hardwood, the flat top profile produced an edge almost as clean as the 40-tooth combination blade.

Cutting plywood was another story. Regardless of the rate of feed, when cutting across the grain of the face veneer, tearout on the bottom was unacceptable for anything except *very* rough work.

SEARS 30-TOOTH RIP BLADE. After using the Freud rip blade, I was anxious to give the Sears blade a try, especially since the tooth configuration on both blades was identical. Unfortunately, as soon as I made a cut, my excitement abated. The finish produced by the 30-tooth Sears rip blade was, without a doubt, inferior to the finish obtained with the Freud blade.

And when you consider that the Sears blade has 30 teeth, rather than 24 on the Freud blade, it was hard to understand how there could be this much deterioration in quality.

CONCLUSIONS. There really was a wide range of quality difference in the finish produced by the two blades. The Freud blade not only produced a better finish, it also cut at a faster rate. Although some of the discrepancy in the rate of feed can be attributed to the higher number of teeth, the deterioration of the quality in the finish finish is needed, as for glue joints. Used for ripping, any crosscut blade will have a very slow rate of feed, and produce a very fine finish. In fact, the quality of the finish produced by the 60-tooth Freud blade was the highest of any of the standard blades I tested. The 72-tooth Sears blade, on the other hand, was really no better than the Freud 40-tooth combination blade.

CONCLUSIONS. From the results of the tests between the Freud and the Sears blades, it appears that they're about equal in the quality of their performance, with the Freud blade slightly in front. But when you factor in the quality of the blade, the Freud blade comes out on top by a significant margin.

can only be attributed to the quality of the blades themselves.

By itself, the results of this test could possibly be dismissed as a fluke. But when they're combined with the problems found with the other Sears blades I tested, I think a fairly clear picture can be drawn on the quality, or lack of it, in the Sears blades.

On the other hand, the Freud blades continually performed at, or above the predicted norms in all three categories. And when the heavily discounted prices of the Freud blades are taken into consideration, it becomes clear to me that they not only represent higher quality, but they also represent a better value in the long run.

THE "SUPER" BLADES

I've grouped two different blades under this classification because they've been manufactured with exacting standards exceeding the industry norms, or they have incorporated a new type of technology in their design.

MR. SAWDUST. The Mr. Sawdust Signature line saw blade manufactured by Forrest Manufacturing is advertised as "the only saw blade you'll ever need." That's a strong claim.

One of the reasons the people at Forrest boast about their blade with such zeal is that it's manufactured to very specific tolerances (its plate tolerance is within .001″). Then to top it off, they've put an exceptional edge on the carbide tips using a super-fine 600-grit diamond wheel.

All in all, the blade is the finest example of quality we've seen, with one exception — the pin holes in the brazing alloy. According to Forrest, this isn't a problem. But according to everyone else, the pin holes shouldn't be there . . . especially on a $160 saw blade.

Because of the high number of teeth, this blade performs at its best when used as a cutoff blade. But it can also be used as a rip blade, although the quality of the cut is only equivalent to about a 40-tooth combination blade.

But one of the most surprising aspects of the Forrest blade is its ability to rip with a rate of feed nearly equal to that of a 40-tooth combination blade. The method Forrest uses to accomplish this feat is, according to them, a trade secret and cannot be disclosed. But they did reveal that it has a lot to do with their special adaption to the standard Triple Chip tooth configuration.

What isn't a secret is the cost of their blade. At $162, it's by far the most expensive blade on the retail market. But the key question is whether or not it's worth the cost.

In all honesty, for crosscutting, the Mr. Sawdust blade produces the finest finish you could ever want. And when you add the optional 6″ dampener (it's just a piece of very flat steel that fits between the blade and the outside collar to help stabilize the blade), the results are incredibly good. When crosscutting oak, the finish is as smooth as glass. It's as close to perfection as one can get, without lying.

Is it worth an extra $100 when compared to some of the standard blades? To answer that, perhaps another question should be asked first. How good is good enough when it comes to the quality of the finish?

In my opinion, once you've reached a certain point, any further improvement in the quality of finish is academic, and usually too expensive to justify.

Whether this blade, or any other "super" blade crosses the line and enters the never never land of perfection is purely personal opinion. My opinion is that this blade produces the finish I've been searching for, but my pocket book says "you've got to be kidding."

FREUD ANTI-GRIP BLADE. After testing the Forrest saw blade, I felt that using any other blade would be a let-down. I was surprised again.

Freud's new Teflon-coated cut-off blade produced the finest finish of all the blades I tested. Freud not only manufactures this blade to higher tolerances (plate tolerance of less than .001″) than their standard blades, they've also improved on the standard tooth configuration (ATB) by adding some secondary bevels. Then they coated the plate with a layer of Teflon to reduce the friction between the blade and the wood. (The icing on the cake.)

When crosscutting, the Freud blade produced a finish equalled only by the finish the Forrest blade *with* the help of the 6″ dampener. And that's saying a lot. (The common reaction around our office was "I can't believe this cut is straight off the saw.")

Because I was so impressed with the finish the Freud blade produced when crosscutting, I decided to try it at ripping (although with 80 teeth, it's really designed only for crosscutting). The finish it produced during ripping was of better quality than the Freud 50-tooth combination blade.

Finally I tried cutting some plywood, and you guessed it, the Freud blade produced the finest finish again (the Forrest blade produced a small amount of tear out on the bottom edges).

WHICH BLADE TO BUY?

If I were trying to choose a carbide-tipped blade that would come closest to "doing it all", without a doubt, I'd choose the 50-tooth Freud combination blade. Then to compliment this blade, the next blade I'd purchase is a 24-tooth rip blade, and finally a 60 to 72-tooth cutoff blade.

As far as the Super blades, not only is the Freud Anti-grip blade cheaper, but it also produces a finer cut than the Mr. Sawdust blade. But honestly, the only way I could consider purchasing either super blade would be if I were doing an awful lot of cut-off work, or had the money to burn. Otherwise, I'd just use the standard blades and pocket the difference.

10″ BLADE COMPARISONS	RIP BLADES		CROSSCUT BLADES		COMBINATION BLADES		SUPER BLADES	
	SEARS 9 GT 32012	FREUD LM72M	SEARS 9 GT 32556	FREUD LU82M	SEARS 9 GT 3255	FREUD LU84M	FORREST Mr. Sawdust	FREUD LU85M
Retail Price	$29.99	$64.85	$54.89	$86.40	$39.99	$70.99	$162.00	$110.88
# of Teeth	30	24	72	60	40	40	60	80
Carbide Quality	N/A	C2	N/A	C4	N/A	C4	N/A	C4
Plate Hardness	stiff	stiff	stiff	stiff	stiff	stiff	stiff	stiff
Carbide Size (length)	8/32″	15/32″	5/32″	13/32″	6/32″	12/32″	9/32″	9/32″
Tip Brazing	good	excel	good	excel	good	excel	good	excel
Tip Grinding	rough	smooth	rough	smooth	rough	smooth	v. smooth	smooth
Runout Tolerances	N/A	.003″	N/A	.003″	N/A	.003″	.001″	.001″
Maximum RPM	5500	7000	5500	7000	5500	7000	N/A	7000
# of Expansion Slots	0	4	3	6	4	uses gullets	4	8

Joinery: Half Laps

MAKING ENDS MEET

Half laps are easy to cut . . . at least they appear that way on the surface. But the trick to making a good, sturdy half lap is to cut it so the joining halves are smooth enough to provide good gluing surfaces. Also, you need to take enough time on the initial set-up to make sure each half of the joint is truly *one-half* the thickness of the stock.

As far as actually cutting the joint is concerned, there are two ways to go about it: 1) remove the waste by making multiple passes over the blade, or 2) make two individual cuts — one cut at the shoulder and the second cut to form the cheek.

MULTIPLE-PASS METHOD

One of the easiest ways to cut a half lap is to make multiple passes over the blade. With this method, only one set-up is needed. However, there is a drawback — the finish on the cheek of the joint is not as good as the two-cut method.

CHOICE OF BLADES. Although any saw blade can be used to make this cut, a rip blade will produce a better surface because it makes a flat-bottomed cut. A dado blade can also be used but some clean-up may be needed to smooth the cheeks.

SET BLADE HEIGHT. To set up this cut, first set the height of the blade. Raise the blade to just a smidgen *less* than one-half the thickness of the stock. Then make a cut at the end of a test piece. Flip the scrap over and make another pass right below the first one, see Fig. 1.

There should be a thin sliver of wood that the blade didn't cut. Raise the blade just a touch, and make the same two cuts again. Then repeat this procedure, until the sliver is skimmed off.

SET FENCE. Once the height of the blade is set, use the fence as a stop for the final cut at the shoulder line. Rather than measuring this distance, I use the second board to position the fence for the shoulder cut on the first board, see Fig. 2. Hold the right edge of the second board against the fence, and adjust the setting until the left edge is flush with the outside edge of the blade.

CLEAN OFF WASTE. Now it's just a matter of making multiple passes to clean off the waste. Start at the end of the piece and work toward the shoulder.

Although this method is relatively quick, it does leave the face of the joint a little rough. If a cut-off or combination blade is used to make the cuts, the surface can be smoothed by sliding the workpiece back and forth over the highest point of the blade, see Fig. 3.

If a rip blade or dado blade was used, a little touch-up with a sharp chisel might be needed.

TWO CUT METHOD

The second method for cutting a half lap involves making two cuts — one to establish the shoulder, and the second to trim off the cheek. This method produces a very clean joint, ready for gluing.

SHOULDER CUT. The first step in this two-cut method is to make a cut at the shoulder line. Set the height of the blade for the shoulder cut (as described in the multiple cut method, above), and use the fence as a stop for the shoulder line, see Fig. 1. When the saw is set up, go ahead and make the shoulder cuts on all pieces, see Fig. 4.

FACE CUT. After the shoulder cuts are made, the workpiece must be stood on end to make the face cut. To do this, I use a shop-made jig, see Fig. 6. (The directions for making this jig are given in *Woodsmith* No. 24.)

Mount a test piece in the jig and adjust the jig so the blade cuts as close to the center of the board as you can get it. Make a trial cut to see if the cheek is aligned with the bottom of the kerf of the shoulder cut, see Fig. 5.

Once the cut is truly cutting half-way, raise the blade to the top of the kerf of the shoulder cut, and trim off the waste on the face of the joint.

MULTIPLE PASS METHOD

FIGURE 1

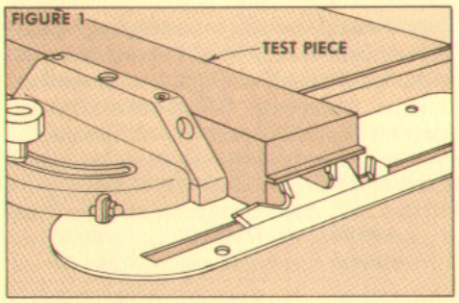

FIGURE 2

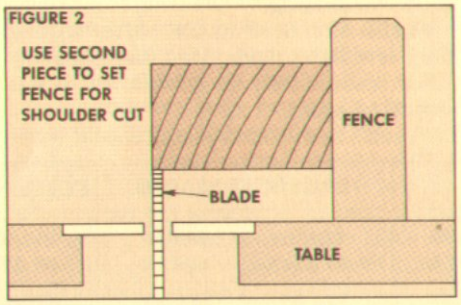

FIGURE 3

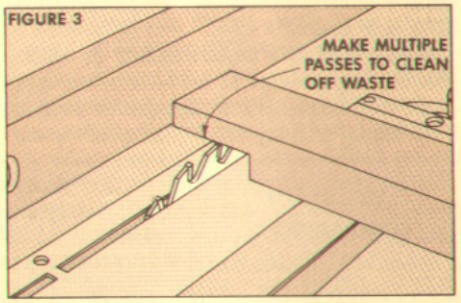

TWO-CUT METHOD

FIGURE 4

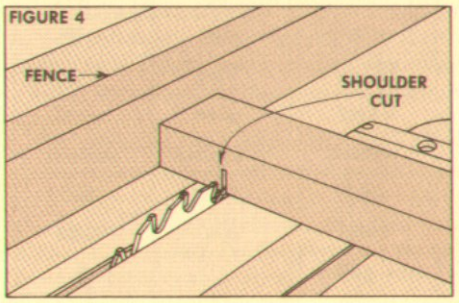

FIGURE 5

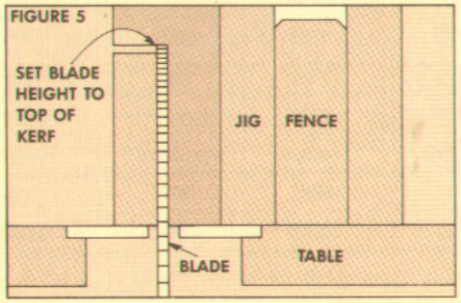

FIGURE 6

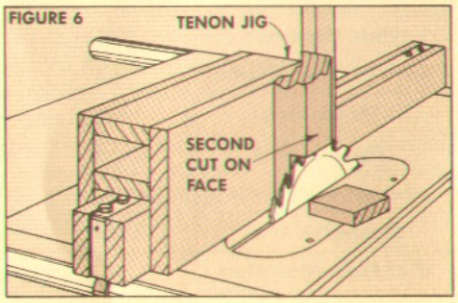

Talking Shop

AN OPEN FORUM FOR COMMENTS AND QUESTIONS

GLUING UP NARROW BOARDS

I have a question that I hope you can answer. Whenever I'm edge gluing a large panel from strips of solid stock, I never know what width to cut the strips.

Are the strips cut to different widths for the different species, like oak, walnut, ash, or maple? And are there any rules of thumb you follow when gluing up large panels?

Bill Powell
Denver, Colorado

Theoretically, the widths of the strips should vary according to the species of wood. The reason for this is that under the same conditions, the amount of movement (in all three planes — tangential, radial, longitudinal) can very widely from one specie of wood to another. By using narrower strips with species that traditionally have a tendency toward excessive movement, the ill-effects in some directions (cupping, for example) can be controlled.

However, there are two other factors that really have more to do with determining the amount of movement of a particular board: the type of cutting pattern that was used to cut the log into lumber (flat sawn, rift sawn, quarter sawn), and the original position of the individual pieces in relationship to the pith, or the log's center. (The closer the piece is to the pith of the log, the more chance there is that it may cup.)

So in theory, the width of each piece probably should vary according to the species, it's original position in the log, and the cutting pattern used when cutting the log.

But in practice, I've found that as long as I keep the width of each strip between 3"-5" (for all species), not only are most of the cupping problems associated with wide boards eliminated, but the number of strips and joints are also kept within reason. So much for theories.

COLLECTING OLD TOOLS

We just received a sample copy of *The Fine Tool Journal, A Newsletter on Hand Tools for Collectors and Craftsmen*. The best description of the content of the newsletter is found in the first paragraph: Tool collectors have two primary concerns: "What's it worth?" and "Who made it, where and when?" These are the questions *The Fine Tool Journal* addresses.

Anyone interested in antique woodworking tools, whether for their antique value, for actual use in the shop, or just to learn more about the history of antique woodworking tools will find this newsletter very helpful.

The issue we received featured articles on modern toolmakers, and "Tid-Bits of Useful Knowledge for Tool Collectors," a classified ad section for antique tools, and a listing of old original tool catalogs still in print.

Then just to toy with their readers, there's a column called "Whatsit?" This column describes a unique old tool whose identity and purpose seem to have eluded all the experts. The hope is that a reader may have crossed paths with the unknown tool before.

A one year subscription (for 10 issues) is $10.00. For more information, contact: Sallie H. Ward, %The Fine Tool Journal, RD #2, Poultney, Vermont 05764

SPLIT TURNINGS

Whenever I'm turning bowls and other items on a lathe, there's a problem that keeps cropping up. The problem is that the wood keeps cracking shortly after the piece is turned. Any suggestions?

Ross Barnes
Cleveland, Ohio

Splitting or cracking of turned projects usually is caused by lumber that hasn't been properly dried. During the turning process, the wet interior of a semi-dried piece of wood is exposed to the air, and it naturally starts to dry out. Unfortunately, drying lumber this way causes extreme stress in the wood as the exterior of the wood dries and shrinks, and the interior stays relatively wet and stable. And when the stress created by this imbalance becomes stronger than the strength of the wood itself, it shows up as splits or cracks in the surface.

There are two ways to eliminate the problem. The first is to use only well dried lumber (dried to 7-9% moisture content) to eliminate the variation in the moisture content between the surface and the interior of the wood.

Although using either kiln dried wood, or thoroughly air dried lumber is the best answer, there are times when a special piece of wood shows up that can't be quickly, or effectively air dried. In this case, using a product called PEG might be the answer.

Polyethylene Glycol (PEG) is a chemical that's used to stabilize small quantities of green or wet lumber (making it ideal for turning stock). The only drawback is that the PEG must be in a heated vat, and the wood must be totally saturated with heated PEG. This whole process can sometimes take several months, depending on the wood and its thickness.

For more information about using PEG, including how to make a heated vat, time schedules, and sources, I'd suggest obtaining a copy of *Working Green Wood With PEG*, by Patrick Spielman, $9.25. (One source is Woodcraft Supply, 41 Atlantic Ave., Woburn, MA 01888.)

CUTTING DIAGRAMS

When you show the dimensions of material in the cutting diagrams for each project, I wonder if there's any allowance made for the kerf of the saw blade? I haven't seen this mentioned in any of your articles, and there are occasions when I feel there is no allowance for kerf widths.

J. F. Marthens
Whittier, California

We do allow for at least an ⅛" kerf for each cut. And sometimes we actually allow for wider kerfs because it's often easier to give each piece a little bit extra width, than having the artists try to draw a very thin waste section on the edge of the drawing.

However, we did goof on the cutting diagram for the Tool Storage Cabinet in *Woodsmith* No. 25. Here we forgot to make allowances for the kerfs.

This brings up a couple of other points about the materials list and cutting diagrams. The materials list gives the quantity, and finished size of each piece in a project. The cutting diagram isn't quite so exacting.

Part of the problem with the layout of the cutting diagram is that hardwood usually isn't available in "standard" sizes. This makes it almost impossible to lay-out a cutting diagram that can be used by everyone.

What we do is lay-out the pieces for a project in the most efficient arrangement, while at the same time keeping the overall dimensions of the lumber needed within reason (12" wide boards make great cutting diagrams, but they're nearly impossible to obtain in most areas).

What this means is that the cutting layout is only a guide. In fact, if you can't purchase lumber in the sizes listed in the cutting diagram, you may need to draw out your own version to match the size of lumber available.

Sources

WOODWORKING CLUBS

THREADED INSERTS

The threaded ("rosan") inserts used to attach the legs on the picnic table in this issue *may* be available at your local hardware store but if not, you can buy them from:

Woodcraft Supply Corporation
41 Atlantic Avenue
Woburn, MA 01888
Telephone: 1-800-225-1153
In Massachusetts: 617-935-5860

By ordering part number 12K51-FT, you'll get a package of 25 inserts which are ½" long, require a ⅜" pilot hole, and accept a ¼-20 threaded bolt. Price per 25 is $9.95.

SAW BLADES

The Sears blades tested in this issue are available in most Sears stores nationwide and in their special tool catalogs.

Freud (PO Box 7187, 218 Feld Avenue, High Point, NC 27264) produces a 96-page catalog which is available for $5.00. The cost of the catalog will be refunded to *Woodsmith* readers with their first order. If you already own a Freud blade, you can get a free copy of the catalog simply by submitting proof of purchase.

For more information about where to locate a Freud dealer in your area, call one of these two toll free numbers: 1-800-334-2505 or 1-800-334-4107. If you live in California, there's a special WATS number: 1-800-824-0141.

Forrest Manufacturing Co., Inc. only sells its products by mail order. So if you're interested in the Mr. Sawdust blade, other blades they make, or a copy of their catalog, call 1-800-526-7852 (New Jersey residents call 1-201-473-5236) or write them at 250 Delawanna Avenue, Clifton, NJ 07014.

WOODWORKING CLUBS

Just about five days after the last issue was mailed, we started to receive responses in answer to our request for information about woodworking clubs.

It's not the same as being there, but we sure enjoy reading the newsletters that are sent in.

What surprised us — and may surprise you — is the incredible variety of woodworking clubs.

Our offer to help with membership recruiting and publicity for anyone who wants to contribute stands. Just send any information about your clubs to Steve Krohmer, %*Woodsmith*, 1912 Grand Avenue, Des Moines, Iowa 50309.

In no particular order (except sort of as they arrived) here's who we've heard from:

SAN JOAQUIN FINE WOODWORKERS ASSOCIATION. Woodworkers from Fresno to Bakersfield (CA) started this club on February 5th. Mark Webster, President, says there'll be three chapters of the club — in Fresno, Bakersfield, and Tulare counties.

The club publishes a nice looking newsletter, sponsors some woodworking classes, and the dues are $20.00 per year.

Contact: Mark R. Webster, 620 North G Street, Porterville, CA 93257 (209-381-4074).

PALM BEACH WOODCRAFTER'S CLUB. Norm C. Friedman, President of the newly formed Palm Beach Woodcrafter's Club, would like to hear from other clubs. They need advice, copies of application forms, by-laws and the like.

If you can help Norm get his club started right, write to him %The Palm Beach Woodcrafter's Club, 402 Chevron Circle, Jupiter, FL 33458 (305-747-0555).

THE ALABAMA WOODWORKERS GUILD. The Alabama Woodworkers Guild started in March. They already have a newsletter, and are planning a show in mid July.

We think the President of the Guild has an appropriate first name: Spruce.

If you're from Alabama, write to Spruce McRee, Sr., PO Box 327, Pelham, AL 35124.

COLORADO WOODWORKERS' GUILD. Len Erickson, President of the Colorado Woodworkers' Guild wants you to know that if you live in Colorado and are interested in joining the Guild, you should write to him at PO Box 5305, Denver, CO 80217.

THE WASHINGTON (DC) WOODWORKERS GUILD. This group has it all together. They hold meetings with expert speakers on a variety of woodworking subjects, and provide what must be a popular and appreciated service for members: group purchasing of supplies and equipment.

The latest issue of their newsletter reported on a wine and cheese party where member Chip Baker (another appropriate woodworking name) said the wine was somewhat lacking in substance. Later the editor reported that "Our meetings are BYOB." We thought that was the kind of meeting we'd like to attend. But Jeff quickly shattered our illusions by explaining the BYOB for a woodworkers guild *has* to mean "bring your own *boards*."

If you're in the Washington, D.C., area, contact Ed Mark, Secretary, 1656 Dunterry Place, McLean, VA 22101 for more information.

SOUTHWEST ASSOCIATION OF WOODWORKERS (SAW). There's a new association of woodworkers forming in the Oklahoma City area.

SAW's (nice name, huh?) membership is currently made up of Federal Aviation Administration (FAA) instructors and technicians at the Oklahoma City Aeronautical Center, but is open to anyone and everyone outside the FAA who is interested in becoming an active, participating member.

Their meetings center around teaching new or different techniques, many of which are based on *Woodsmith* articles (a source we highly recommend).

They're also looking forward to communicating and exchanging ideas with other clubs. Contact: Robert Pettingill, Southwest Association of Woodworkers, 1206 South Highland, Mustang, OK 73046 or call 405-376-4765.

FLORIDA WOODWORKERS ASSOCIATION. W. B. Keeton, 210 Thomas Court NW, Ft. Walton Beach, FL 32548 says the Florida Woodworkers Association is three months old and already has 80 members. They meet the first Thursday of the month to swap ideas and help each other.

Write to W. B. for more information.

IWCCG. Those initials are the acronym for the most unusual woodworker's organization we've heard from yet (are there more to come?): The International Wooden Coffin Craftsman's Guild.

Why don't I let Tyrone D. Gormley, one of the founders, say it: "Quite recently some friends around the country formed a special club. [We are] interested in making wooden coffins. I know this is a bit unusual (yes, we'd agree with that) but there has been an upsurge in the art of the wooden coffin and the making of it.

"Currently I have a list of 20 persons who are corresponding with each other. If any of your subscribers want to inquire about the Guild, and receive all information and lists of persons, have them write to me at 3005 Val Drive, Austin, TX 78723. Send $2.00 for postage and duplication costs."

THE WOODWORKERS CLUB (CENTRAL IOWA). Right in our own backyard is a woodworking club open to anyone in Central Iowa. The Woodworkers Club in Ames has more than 20 members. They meet the third Tuesday of each month, charge $5.00 annual dues, and publish a newsletter.

Contact Loren Zachary, Secretary/Treasurer, 4305 Ross Road, Ames, Iowa 50010. Phone: 515-292-1567.